Table of Contents

Summary

Nomenclature

1. Introduction **1**

1.1 Thermal Energy Storage 1

1.1.1 Properties of a Hot Water Storage 1

1.1.2 Stratification 2

1.2 Energy Systems Simulation 3

1.2.1 Introduction to TRNSYS 4

1.2.2.1 Hot Water Storage 5

1.2.2.2 Stratification Simulation 5

1.2.2.3 The TRNSYS TYPE 4 Multi-Node Model 5

2. Modifications to the Type 4 Model **11**

2.1 Inlets and Outlets 11

2.1.1 Current Model 11

2.1.2 Variable Inlet and Outlet Positions 14

2.1.3 Inlet and Outlet Flow Rates 15

2.1.4 Mass Balance 16

2.1.5 Energy Balance 19

2.2 Pressure Drop 20

2.2.1 Natural Convection Systems 20

2.2.2 Hydrostatic Head 21

2.3 Tank Flue Losses 23

2.4 Tanks with Non Cylindrical Cross Section 24

3. System Simulations with the Modified Model **25**

3.1 Unequal Inlet and Outlet Flows 26

3.1.1 Tank without a Cold Inlet Flow 26

3.1.2 Two Tank System 29

3.2 Multiple Outlet Positions 33

3.3 Effective Convection and Conduction 35

3.4 Tank Flue Losses 38

4. Proposed Future Research **43**

4.1 Parameters, Inputs, and Outputs 43

4.1.1 Introduction to the Plug Flow Model 44

4.1.2 Parameters in the Multi-Node and the Plug Flow Model 45

4.2 Tank Model with Indirect Charging and Discharging 47

References **49**

Appendix

A TRNSYS Component Configuration of the New TYPE 4 50

B TRNSYS - Decks 55

C TRNSYS FORTRAN Source Code of the New TYPE 4 60

Summary

Solar energy is a time-dependent energy resource. The demands for energy are also time dependent but in a different fashion than the solar energy supply. Consequently, energy has to be stored if solar energy is to meet substantial portions of these energy needs. One of the most economically feasible methods of solar storage is a fluid storage tank.

Before choosing the proper size and performance of a thermal fluid storage, it is important to make calculations with the whole system. The TRNSYS software package has been used extensively for thermal system analysis. It has a modular structure and consists of individual subroutines which represent real physical devices or utility components. The components can be connected together to form complex systems.

One of these components is the TYPE 4 multi-node model. The tank is modeled as N fully mixed volume segments. The degree of temperature stratification, which increases the effectiveness of a storage tank, is determined by the choice of N. Higher values of N result in more stratification.

Although the current TYPE 4 tank model has been proven to be an accurate component, it has some limitations. Outlet flows are fixed at the tank top (load flow) or tank bottom (collector flow). The tank has always two inlets and two outlets. Inlet flow rate from one source are automatically the outlet flow rate to the same source. The output of the losses to

the exhaust of a gas auxiliary heater are added to the losses to the environment. Only tanks of circular cross section can be used.

The goal of this project is to modify the current TYPE 4 model. The new TYPE 4 includes several new features which make the tank more versatile. Inlet and outlet positions can be located anywhere in the tank. Inlet flow rates from one source do not have to be automatically equal the outlet flow rate. Also the tank need not have two inlets and two outlets; it can have less than four flows, and still satisfy a mass balance for the whole tank. The losses to the exhaust flue of an optional gas auxiliary heater are output separately from the losses to the environment. The cross section of the tank can be circular or rectangular. The new model calculates the difference in static pressure between the top of the tank and each inlet and outlet position. This option is needed to simulate a thermosiphon system. Further, the conduction between the tank segments (nodes) is considered. Since tanks may destratify more rapidly due to natural convection a user specified parameter has been added to the conduction coefficient.

Nomenclature

Roman Symbols

a	[kJ/(°C hr.)]	coefficient in the discrete equations
A	[m^2]	cross-section area of the tank
A_i	[m^2]	inside surface area of the auxiliary heater exhaust
A_o	[m^2]	outside surface area of the auxiliary heater exhaust
A_m	[m^2]	middle surface area of the auxiliary heater exhaust
b	[kJ/(°C hr.)]	coefficient in the discrete equations
C_{fl}	[kJ/(kg °C)]	specific heat capacity of the tank fluid
d_1	[m]	inside diameter of the auxiliary heater exhaust
d_2	[m]	outside diameter of the auxiliary heater exhaust
F_R	[-]	collector heat removal factor
FL_1	[kg/hr.]	extern flow rate into the ith node
FL_2	[kg/hr.]	flow rate out of the tank from the ith node
FL_3	[kg/hr.]	extern net flow out of or into the ith node
FL_4	[kg/hr.]	flow from the node above
FL_5	[kg/hr.]	flow to the node above
FL_6	[kg/hr.]	flow to the node upon
FL_7	[kg/hr.]	flow to the node below
FL_8	[kg/hr.]	intern netflow to the node below
FL_{4S}	[kg/hr.]	mass flow storage variable
FL_{6S}	[kg/hr.]	mass flow storage variable

g	[m/s^2]	acceleration of gravity
h_i	[W/(m^2 K)]	free convection coefficient inside the exhaust of the gas auxiliary heater
h_o	[W/(m^2 K)]	free convection coefficient inside the tank
H_t	[m]	height of the tank
Δh_i	[m]	height of each node
H1	[m]	height of tank top
H2	[m]	height of inlet or outlet
I_T	[kJ/(hr. m^2)]	total radiation incident on the collector per unit area
k_{fl}	[kJ/(hr. m °C)]	thermal conductivity of the tank fluid
k	[kJ/(hr. m °C)]	thermal conductivity of the gas auxiliary exhaust wall
Δk_{eff}	[kJ/(hr. m °C)]	effective convection between the nodes
l_{gt}	[m]	length of the auxiliary heater exhaust tube
M_i	[kg]	mass of the ith node
$\dot{m}_d$	[kg/hr.]	flow rate from the ith node to the node below
$\dot{m}_H$	[kg/hr.]	heat source flow rate
$\dot{m}_{Hi}$	[kg/hr.]	incoming flow rate from the heat source
$\dot{m}_{Ho}$	[kg/hr.]	flow rate to the heat source
$\dot{m}_{(i-1)}$	[kg/hr.]	flow rate from the node above into the ith node
$\dot{m}_{(i+1)}$	[kg/hr.]	flow rate from the node below into the ith node
$\dot{m}_L$	[kg/hr.]	load flow rate
$\dot{m}_{Li}$	[kg/hr.]	incoming flow rate from the load
$\dot{m}_{Lo}$	[kg/hr.]	flow rate to the load
$\dot{m}_u$	[kg/hr.]	flow rate from the ith node to the node below

N	[-]	number of nodes
N_i	[-]	number of the ith node
Per_t	[m]	perimeter of the tank cross section
Δp	[kPa]	pressure drop
R_i	[-]	Richardson number
t	[hr.]	time
Δt	[h]	time step
T_{env}	[°C]	temperature of the environment
T_{fl}	[°C]	temperature of the gas flue when the auxiliary is off
T_H	[°C]	temperature of the incoming fluid from the heat source
T_i	[°C]	node temperature
$T_{(i-1)}$	[°C]	node temperature of the node above
$T_{(i+1)}$	[°C]	node temperature of the node below
$\bar{T}_i$	[°C]	average node temperature
T_L	[°C]	temperature of the incoming load flow
T_{in}	[°C]	temperature of the fluid returned to the heat source
ΔT	[°C]	temperature difference between the inlet fluid and the initial tank temperature
U_{bot}	[kJ/(m^2 hr. °C)]	overall heat loss coefficient at the tank bottom
U_i	[kJ/(m^2 hr. °C)]	overall heat loss coefficient of the ith node
U_L	[kJ/(m^2 hr. °C]	overall heat loss coefficient between the collector and the environment per unit area
U_{top}	[kJ/(m^2 hr. °C)]	overall heat loss coefficient at the tank top

UA_i	[kJ/(hr. °C)]	overall heat loss coefficient between the tank and the environment
UA_{gfl}	[kJ/(hr. °C)]	overall heat loss coefficient to the exhaust flue of an in-tank gas auxiliary heater
$UA_{gfl,i}$	[kJ/(hr. °C)]	overall heat loss coefficient to the gas flue of an in-tank gas auxiliary heater for node i
V_t	[m^3]	tank volume
V_i	[m^3]	volume of the plug flow segments
w	[m/s]	fluid velocity at the inlet-port

Greek Symbols

α	[-]	control function in the parameterlist
α_i	[-]	control function for node i
α_o	[-]	control function for node i
β	[1/°C]	thermal expansion coefficient of the fluid
β	[-]	control function in the parameterlist
β_i	[-]	control function for node i
β_o	[-]	control function for node i
γ_i	[-]	control function for node i
δ_i	[-]	control function for node i
δ	[m]	wall thickness of the auxiliary heater exhaust tube
$\delta_{(i-1)}$	[m]	axial distance between the centers of the ith node and the node above

$\delta_{(i+1)}$	[m]	axial distance between the centers of the ith node and the node below
ε	[-]	control function for the auxiliary heater
τ	[hr.]	time (integration variable)
$(\tau\alpha)$	[-]	transmittance-absorptance product
ρ	[kg/m^3]	tank fluid density
ρ_i	[kg/m^3]	fluid density of the ith node

CHAPTER 1

Introduction

1.1 Thermal Energy Storage

Solar energy is not available constantly. The energy demand of most domestic and industrial applications are also time dependent, but the time of need usually differs from the solar energy supply. Consequently, the storage of energy is necessary if solar energy is to meet substantial portions of these energy needs.

1.1.1 Properties of a Hot Water Storage

For most domestic solar systems, water is the ideal material to store thermal energy. Water has excellent thermal properties, which includes a high energy storage per unit volume. It is plentiful, essentially free, non toxic and nonflammable [1]. The ability to pump the fluid from place to place, allows for the addition and removal of energy by transport of the storage medium itself, thus eliminating the temperature drop between transport fluid and storage medium [2]. Problems with using water in solar systems include the possibility of freezing, corrosion in collectors and tubes, and potable water hygienic regulations, all of which could require a separation between the collector loop and the tank water [3].

1.1.2 Stratification

The density of fluids is a function of temperature and decreasing density occurs with increasing fluid temperature. As a result, fluid in tanks will tend to stratify with the hotter fluid on top of the colder. Thermal stratification in storage tanks of a solar water heater has a significant positive effect on the efficiency of the system. Pumping cold fluid from the bottom of the tank to the solar collector decreases the heat loss from the collector. Pumping hot water from the top of the tank to the load means that less auxiliary heating will be required. The density difference between the tank top and bottom can also produce a flow in the collector loop of a natural circulation system. A hot storage tank temperature is desired in order to meet the energy demand with acceptable delivery temperature. Sharp and Loehrke [4] showed in experiments that low flow rate thermally stratified solar water heaters are able to deliver significantly more solar energy to the load than fully mixed tanks. A computer simulation of similar systems has shown that if an optimum collector flow rate is used, the performance can be 37% higher than a corresponding system with a fully mixed tank [5].

Loss of stratification of the thermal storage tank results from convective mixing, both forced and natural and to lesser extent from conduction between hot and cold fluid layers. Maintaining thermal stratification requires that mixing in the tank be minimized. Mixing depends on the design of the tank and the operating conditions (e.g. flow rate and temperature of incoming fluid streams and the temperature distribution in the tank). Forced convection mixing is due to the momentum of the fluid streams entering the storage tank and depends on the flow rate of the entering stream and the design of the inlet. Mixing due to natural convection occurs when the fluid entering the storage tank is colder or hotter than the surrounding fluid. Differing fluid densities give rise to a natural convection current which mixes

the tank. Vertical conduction within the storage wall tank can also give rise to natural convection currents. Fluid near the wall is cooled to the mean tank temperature faster than is the bulk of the fluid in the tank. The resulting horizontal temperature distribution drives a natural convection [6]. Thermal stratification is closely related to hydrodynamic stability and buoyancy effects. Chandreskhar [7] and Turner [8] indicate that the Richardson number has an impact in the formation and growth of the thermocline.

$$R_i = \frac{g\, b\, \Delta T\, H}{w^2} \tag{1.1}$$

Veltkamp [9] indicates that mixing occurs for Richardson numbers less than the critical value of 0.25. Experiments performed by Loehrke and Holzer propose that good stratification in a tank with turbulent incoming fluid requires a Richardson number as high as 4.7.

1.2 Energy Systems Simulation

A mathematical model of a physical system consists of a set of coupled equations relating the system's physical parameters. The equations used are based on the known laws of nature plus a set of assumptions that emphasize the most important aspects of the system. Choosing the proper assumptions is a very important task of a modeler. Analytic solutions are preferable for elucidating the effects of parameter variations. Except for the most simple models, it is unusual to find a set of equations that has a closed form solution. However, numerical solutions are sufficiently accurate for a large number of complicated systems [2].

1.2.1 Introduction to TRNSYS

TRNSYS is primarily designed to simulate the transient performance of thermal energy systems, so that energy systems can be designed as economically as possible. TRNSYS uses a modular approach to solve thermal energy systems. It requires an input file in which the user specifies the components that constitute the system and the manner in which they are connected. Fig. 1.1 shows a typical solar domestic hot water system (SDHW) consisting of a solar collector, thermal storage, auxiliary heater, heat exchanger, pumps and controllers. For each of these components (and more) there exists a program module in the TRNSYS library, which describes the transient behavior of the module.

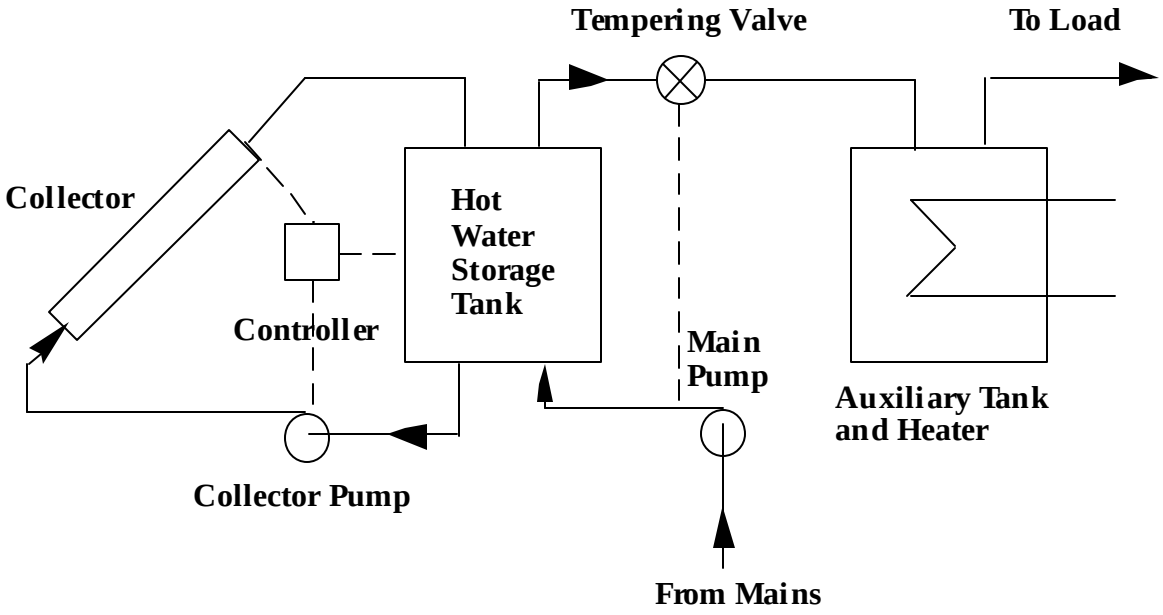

Fig. 1.1 Typical Solar Domestic Hot Water System

1.2.2 Modeling of Thermal Energy Fluid Storage

Fluid storage simulations are important to eliminate expensive and time consuming experimental studies. The engineer is more flexible in changing tank parameters like volume, height, initial temperature, etc. in a simulation than in an experiment.

1.2.2.1 Hot Water Storage

Hot water tanks for diurnal storage applications are undoubtedly the most common energy storage device and, as expected, modeling of hot water storage has received more attention than any other kind of energy storage modeling. The performance of a water tank system depends on the amount of water present, the shape and material composition of the tank, the amount of external insulation, the sizes and locations of the inlets and outlets, and the water flow rate. Thermodynamic and hydraulic process within the tank can be very complex. Nevertheless simplified models can usually represent this behavior accurately enough.

1.2.2.2 Stratification Simulation

Water tanks may operate with significant degrees of stratification, i.e. with the top of the tank hotter than the bottom. Many stratified tank models have been developed; they fall into either of the two categories. In the first, the multi-node approach, a tank is divided into N nodes (sections), with energy balances written for each section of the tank. The result is a set of N differential equations that can be solved for the temperatures of the N nodes as functions of time. In the second, the plug flow approach, segments of liquid at various temperatures are assumed to move through the tank in plug flow, and the models are essentially bookkeeping methods to keep track of the size, temperature and position of the segments. Each of these approaches has many variations and the selection of a model depends on the use to which it

will be put [1]. The effects of numerical diffusion, to approximate the real stratification in a tank, can be somewhat alleviated if the storage tank is divided into many fully mixed segments. The problem with increasing the number of segments is that the computation time then also increases. Therefore, a proper number of nodes should be chosen. Kleinbach [10] investigated the proper selection of the number of nodes.

1.2.2.3 The TRNSYS TYPE 4 Multi-Node Model

The TYPE 4 model approaches the thermal stratification of the tank by assuming that the tank consists of N fully-mixed volume segments, as shown in Fig. 1.2. Higher values of N result in more stratification. A maximum number of 15 nodes can be chosen. For the special case of N=1 the tank is modeled as a fully mixed tank and no stratification effects are possible [10]. To decrease the computation time it is possible to specify unequal sized nodes. This makes it possible to have more nodes in the better stratified than in the less stratified part of the tank.

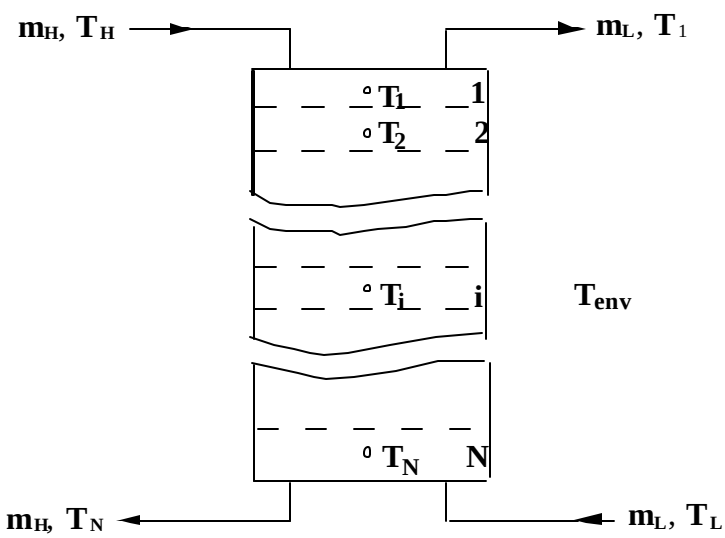

Fig. 1.2 N-Node Tank

The model optionally includes two electric resistance heating elements, subject to temperature and /or time control. The control option allows the addition of electrical energy to the tank during selected periods of each day (e.g., off-peak hours). The electric resistance heaters may operate in one of two modes. The first mode, a master- slave relationship, allows the bottom heating element to be enabled only when the top element is satisfied. In this control

mode, it is impossible for both heaters to be on simultaneously. In mode 2, both heaters may be on simultaneously. This allows for quicker heating of the storage tank, but also a significant higher electric demand. Mode 1 is common to most domestic hot water applications. The auxiliary heaters employ a temperature deadband. The heater is enabled if the temperature of the node containing the thermostat is less than (T_{set} - ?T_{db}) or if it was on for the previous interval (the period between the current and the time step bevor) and the thermostat temperature is less than T_{set} .

In many circumstances, the tank may not be uniformly insulated or users may wish to account for pipe entrances on the storage tank. It is possible to incrementally insulate certain nodes of stratified tanks by the specification of additional parameters.

The model allows for losses to the exhaust flue of an in-tank gas auxiliary heater. The overall heat loss to the gas flue, UA_{gfl}, and the average flue temperature when the auxiliary is not operating have to be specified [11].

The governing differential equation for the ith node is as follows:

$$\begin{aligned} M_i C_{fl} \frac{dT_i}{dt} = {} & \alpha_i \dot{m}_{heat} C_{fl} (T_{heat} - T_i) + \beta_i \dot{m}_{load} C_{fl} (T_{mains} - T_i) \\ & + \gamma_i \dot{m}_{(i-1)} C_{fl} (T_{(i-1)} - T_i) + \delta_i \dot{m}_{(i+1)} C_f (T_{(i+1)} - T_i) \\ & + \varepsilon \dot{Q}_{aux,i} - (1-\varepsilon) UA_{gfl,i} (T_i - T_{gfl}) - UA_i (T_i - T_{env}) \end{aligned} \tag{1.2}$$

where the control functions are:

α_i = 1, if fluid from heat source enters node i, 0 otherwise

β_i = 1, if fluid returning from load enters node i, o otherwise

γ_i = 1, if the netflow $\dot{m}_{(i-1)}$ enters node i from the node above

= -1, if the netflow $\dot{m}_{(i-1)}$ goes from node i to the node above

= 0, if there is no flowstream between node i and the node above

δ_i = 1, if the netflow $\dot{m}_{(i+1)}$ enters node i from the node below

= -1, if $\dot{m}_{(i+1)}$ goes from node i to the node below

= 0, if $\dot{m}_{(i+1)} = 0$

ε = 1, if auxiliary is on, 0 otherwise

Equation (1.2) is solved analytically each time step (Δt) for every node of the tank. TRNSYS provides a subroutine, called "DIFFEQ" to solve analytical solutions for first-order linear differential equations that are written as

$$\frac{dT}{dt} = aT + b \tag{1.3}$$

(1.2) can be easily transformed into a form like (1.3), a and b would yield the following equations (1.4) and (1.5):

$$a = -C_f(\alpha_i \dot{m}_{heat} + \beta_i \dot{m}_{load} + \gamma_i \dot{m}_{(i-1)} + \delta_i \dot{m}_{(i+1)}) - (1-\varepsilon)UA_{gfl,i} - UA_i \tag{1.4}$$

$$\begin{aligned} b = {} & C_f(\alpha_i \dot{m}_{heat} T_{heat} + \beta_i \dot{m}_{load} T_{mains} + \gamma_i \dot{m}_{(i-1)} T_{(i-1)} + \delta_i \dot{m}_{(i+1)} T_{(i+1)}) \\ & - (1-\varepsilon)UA_{gfl,i} T_{gfl} - UA_i T_{env} \end{aligned} \tag{1.5}$$

Equation (1.3) has the solution:

$$T_i(t+\Delta t) = \left(T_i(t) + \frac{b}{a}\right) e^{a\Delta t} - \frac{b}{a} \tag{1.6}$$

The average temperature over the time step ?t is defined as:

$$\overline{T_i} = \frac{1}{\Delta t}\int_0^{\Delta t} T_i(t+\tau)d\tau = \frac{1}{\Delta T}\int_0^{\Delta t}\left\{\left(T_i(t) + \frac{b}{a}\right) e^{a\tau} - \frac{b}{a}\right)d\tau \tag{1.7}$$

Integration of (1.7) yields:

$$\overline{T_i} = \frac{T_i(t) + \frac{b}{a}}{a\Delta t}\left(e^{b\Delta t} - 1\right) - \frac{b}{a} \tag{1.8}$$

CHAPTER 2

Modifications to the TYPE 4 Model

2.1 Inlets and Outlets

The TYPE 4 tank model is charged and discharged directly, meaning that the incoming charging and discharging flows are not separated from the tank fluid. The tank has inlets and outlets for the charging flows to and from the heat source and flows to discharge the tank to and from the load or another component.

2.1.1 Current Model

The model currently in use always has two inlets and two outlets (Fig. 1.2). The outlets are always located at the same node positions. The outlet to the load is located in the top node and the outlet to the heat source is located at the bottom node. There are three modes available to locate the inlets. In mode 1 (fixed inlet positions), flow streams enter the tank at fixed positions. This means that they will not change during the entire simulation. The load flow enters at the bottom of the tank and the hot stream source enters just below the node where the top auxiliary is located, if present, or at the top of the tank if no auxiliary is specified. At the end of each time interval, any temperature inversions that exist are eliminated

by mixing of the appropriate adjacent nodes.

In mode 2 (variable inlet positions), the flow stream enters the node which closest matches it in temperature. For example, for the five-node tank shown in Fig. 2.1, water from the collector would enter node 3, where its density nearly matches that of the water of the tank. With sufficient nodes, this permits a maximum degree of stratification in the multi node model.

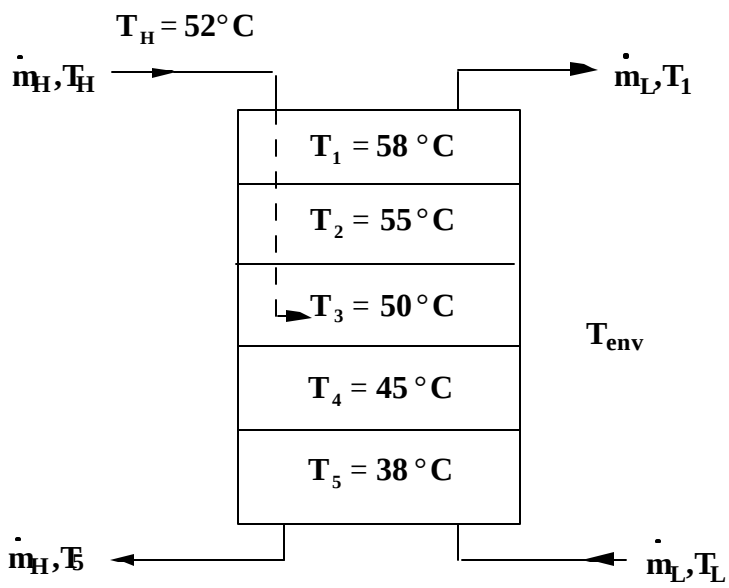

Fig. 2.1 Tank with Variable Inlet Positions

In mode 3 (user designated inlet position), the user must specify the nodes containing the load flow and source flow inlet locations. This inlet locations remain fixed for the entire simulation. The inlet and outlet locations are specified as node positions. In this mode the inlet positions have to be changed if the number of nodes changes to maintain the inlet positions. The inlet flow rate from one source into the storage is assumed to be the same outlet flow to this source

(e.g. collector or load). Thus, the flow rate entering the tank from the heat source m_{Hi} is equal to the outlet flow rate to the heat source m_{Ho}. In a similar manner the inlet flow rate from the load m_{Li} is equal to the outlet flowrate to the load m_{Lo}.

$$\dot{m}_{Hi} = \dot{m}_{Ho} = \dot{m}_{H} \tag{2.1}$$

$$\dot{m}_{Li} = \dot{m}_{Lo} = \dot{m}_{L} \tag{2.2}$$

The resultant flow between the nodes is either up or down. If the collector flow rate m_H is larger than the load flowrate m_L, the net flow between the two inlets goes down. An assumption employed in this model is, that the fluid streams flowing up or down from each node is fully mixed before it enters the adjacent segment. Fig. 2.2 shows an example of the flow streams between the nodes in a 5 node tank with the collector inlet in node 2 and the load inlet in node 4. The outlet positions in the current model are automatically at the top or at the bottom. Due to this restriction only the top and bottom nodes have external flows out.

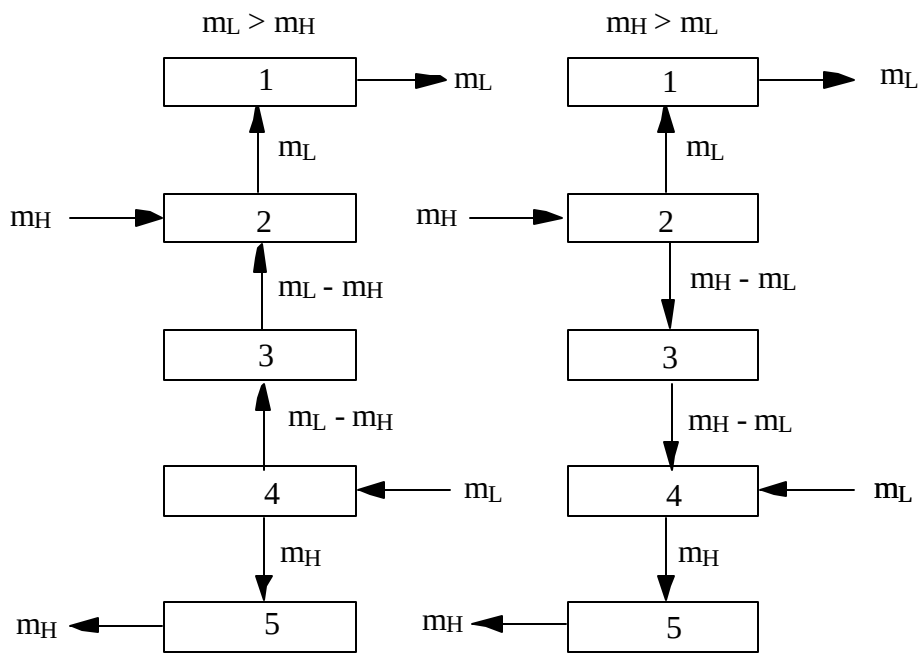

Fig. 2.2 Net Flows in a 5 Node Tank Example

2.1.2 Variable Inlet and Outlet Positions

To have the highest effectiveness in a hot fluid storage, it should have the outlet to the heat source at the "cold" bottom of the tank and the outlet to the heat source at the "hot" top of the tank. This fact becomes clear by looking at equation (2.3) for the efficiency of a flat-plate collector, where T_{in} is the temperature of the fluid returned to the heat source.

$$\eta = F_R(\tau\alpha) - F_R U_L \frac{(T_{in} - T_{env})}{I_T} \tag{2.3}$$

If a tank is connected to the collector, the inlet collector temperature is the temperature of the outlet flow from the storage tank. The lower the inlet temperature the higher the efficiency of the collector.

Nevertheless, some tanks do not have the outlet positions at the top or bottom. If the tank is used as a cold fluid storage the most effective performance would be to have the outlet to the chiller at the top and the outlet to the load at the bottom.

The new model requires the user to specify both inlet and outlet positions. The inlet and outlet positions can be specified at any height or they can be specified as non existent. The locations are specified as distance from the tank top (in meters). The program will transform the metric height into the respective inlet or outlet node for further calculations inside the code. This option allows the user to change the number of nodes in a simulation without changing the inlet and outlet positions as well.

2.1.3 Inlet and Outlet Flow Rates

In some systems the inlet flow rate from one source into the storage tank will not automaticaly be the same as the outlet flow from the tank to the same source. E.g. a system could have no flow from the load to the storage, but instead have an additional flow into the heat source directly from the mains (Fig. 3.1)[1)] . Another system with different inlet and outlet flow rates to and from a component is a two tank system with a collector and an auxiliary tank (Fig. 3.4)[1)] . The auxiliary tank has only an inlet from the collector tank and an outlet to the load. To simulate such systems, the user specifies non existant flows at the missing inlets and outlets. Any one of the remaining flow streams has to be specified as unknown and is calculated through an mass balance for the whole tank, equation (2.4). If one of the flow rates are

---

[1)] This Figure is showed in the next chapter

negative, i.e. an inlet flow is really an outlet flow or vice versa, the program will terminate with an error message.

2.1.4 Mass Balance

The new options for the inlet and outlet flows and the variable outlet locations require a modified mass flow balance for each node. Fig. 2.3 shows the possible flow stream in and out of one node: flows in from the heat source m_{Hi} and from the load m_{Li}; outlet flows to the heat source m_{Ho} and to the load m_{Lo}; flow to adjacent nodes below m_d and above m_u; flow from adjacent nodes below $m_{(i-1)}$ and above $m_{(i+1)}$.

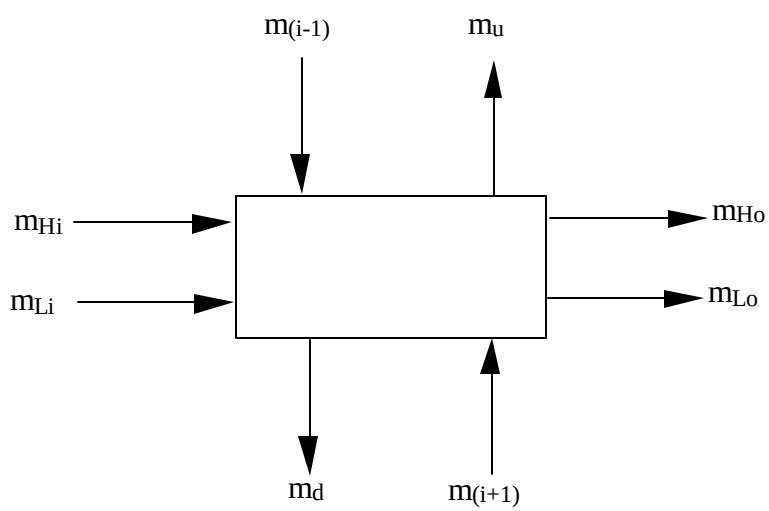

Fig. 2.3 Mass Balance for One Node

A mass balance for the ith segment is then

$$\dot{m}_{(i-1)} + \dot{m}_{(i+1)} + \dot{m}_{Hi} + \dot{m}_{Li} = \dot{m}_u + \dot{m}_d + \dot{m}_{Ho} + \dot{m}_{Lo} \qquad (2.4)$$

If there are flows between two adjacent nodes in both directions (up and down), the program calculates with the net flow between the nodes.

Fig 2.4 shows a flow chart of the code for the energy balance. The flow chart is a do loop which calculates the flows used in the energy balance for every node starting with the top node and ending with the bottom node. First the external net flow FL_3 for the top node is calculated as the difference between the external inlet flow FL_1 and outlet flow FL_2 of the current node. If the external net flow does not equal 0, the net flow Fl_3 is going down from the top segment to the adjacent node below or is coming up from the adjacent node below into the first node. If Fl_3 is negative, the flow stream FL_5 is coming up from the node below into the top node. Otherwise, the flow FL_7 ($FL_7 = |FL_3|$) goes down to the node below (node 2). After calculating the energy balance for the first node, the loop switches to the second node and calculates its external net flow FL_3. The flow from the node above FL_4, is the flow FL_7 from the former node stored in FL_{4S}. As well is the flow to the node upon FL_6, the flow to the former node FL_5 stored in FL_{6S}. A mass balance calculates FL_8, the flow down to the next node below if FL_8 is positive, or from the node below into the second node if FL_8 is negative. The same method follows for the remaining nodes.

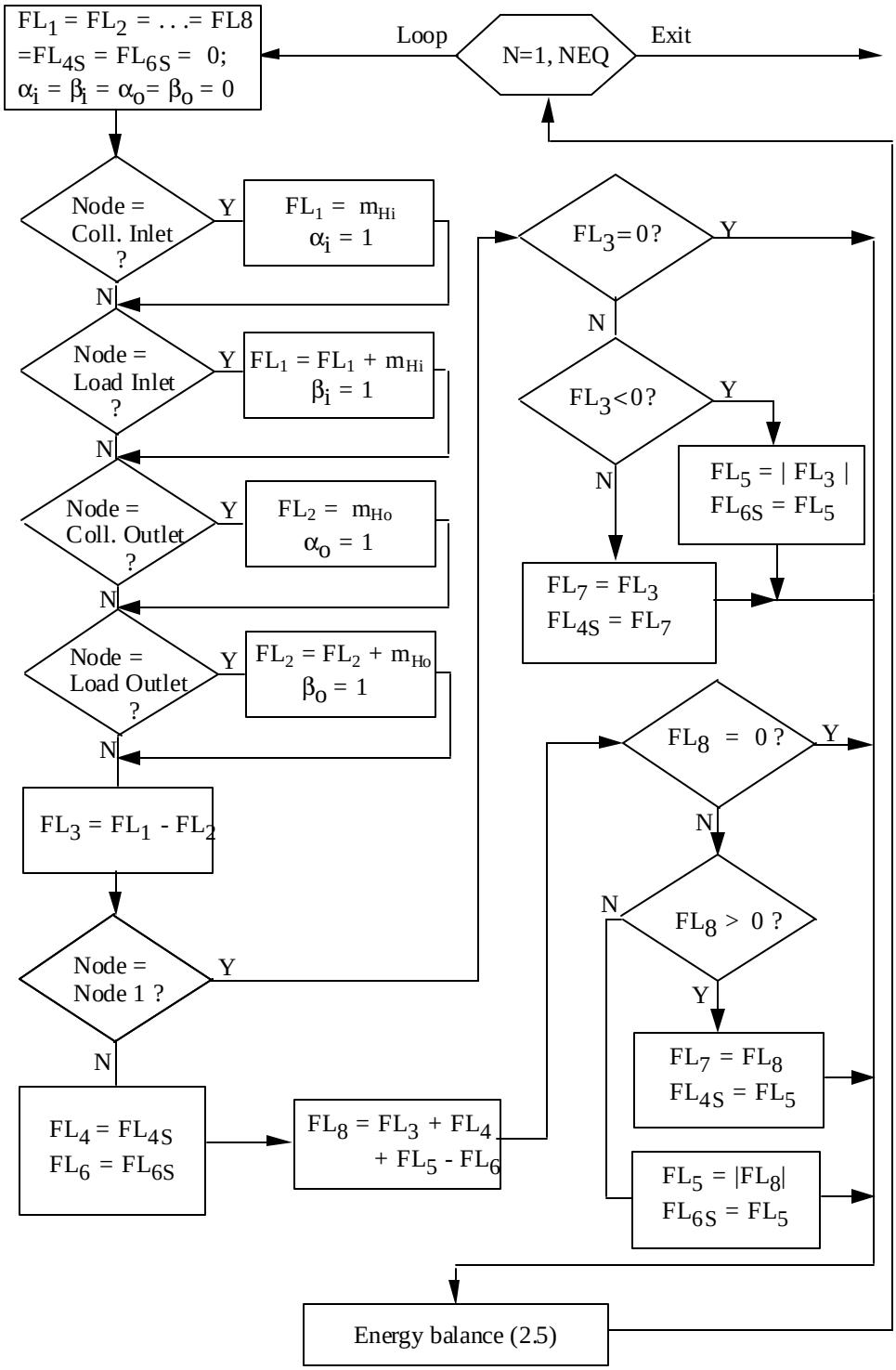

Fig 2.4 Do Loop to Calculate the Node Flow Streams

2.1.5 Energy Balance

Due to the fixed outlet positions at the top and bottom node, the current model has flow streams through every node during charging and discharging periods. With the new option of multiple outlet positions it is possible to have nodes without any net flow during charging and discharging of the tank. This may yield to an unrealistic high temperature distribution between the nodes with and without flows (Fig. 3.10)[1]. Also the natural convection due to the “cold” storage tank wall and differing fluid densities, which results in "mixing", should be considered. The conduction, k_{fl}, between hot and cold water layers has rather a negligible effect in the energy transfer between adjacent nodes. In the new model the user specifies the conductivity of the tank fluid k_{fl} and an additional number, Δk_{eff}, which takes the effective and the natural convection into consideration. The following differential equation yields to the energy balance for the ith node of the storage:

$$\begin{aligned}\rho_{fl} C_{fl} V_t \frac{dT_i}{dt} = {} & C_{fl} (\alpha_i \dot{m}_{Hi} T_H + \beta_i \dot{m}_{Li} T_L - \alpha_o \dot{m}_{Ho} T_i - \beta_o \dot{m}_{Lo} T_i \\ & + FL_4 T_{(i-1)} + FL_5 T_{(i+1)} - FL_6 T_i - FL_7 T_i) \\ & + (\Delta k_{eff} + k_{fl}) A \left(\frac{(T_{(i-1)} - T_i)}{\delta_{(i-1)}} + \frac{(T_i - T_{(i+1)})}{\delta_{(i+1)}} \right) \\ & - UA_i (T_i - T_{env}) - (1-\varepsilon) UA_{gfl} (T_i - T_{gfl})\end{aligned} \tag{2.5}$$

Where $\delta_{(i-1)}$ and $\delta_{(i+1)}$ are the axial distances between the ith node center and the centers of the nodes above and below and α_i, α_o, β_i, and β_o are control functions, which are either on or off (1 or 0).

---

[1] This Figure is showed in the next chapter

The ith node temperature, after the changes due to flows, conduction, effective convection and losses is the solution of the first order differential equation, which has the form of equation (2.5). If the ith node includes the thermostat of an auxiliary heater, and the node temperature is less than the set temperature T_{set}, auxiliary energy is added to increase the node temperature.

2.2 Pressure Drop

In some system performances the pressure drop between the inlets and outlets of the tank and the collector can replace the pump. This makes the system in general more simple and effective, because no pump and complex controller is needed and the relatively high energy consumption of the pump can be saved.

2.2.1 Natural Convection Systems

Circulation in passive solar water heaters such as that shown in Fig. 2.5 occurs when the collector warms up enough to establish a density difference between the leg including the collector and the leg including the tank and the feed line from tank to collector. The density difference result in a pressure difference which drives the flow of the fluid around the loop. The density difference is a function of temperature difference, therefore the flow rate is a function of temperature difference. Under these circumstances, these systems are self-adjusting, with increasing gain leading to increasing flow rates through the collector. For good buoyancy it is important to locate the storage above the collector.

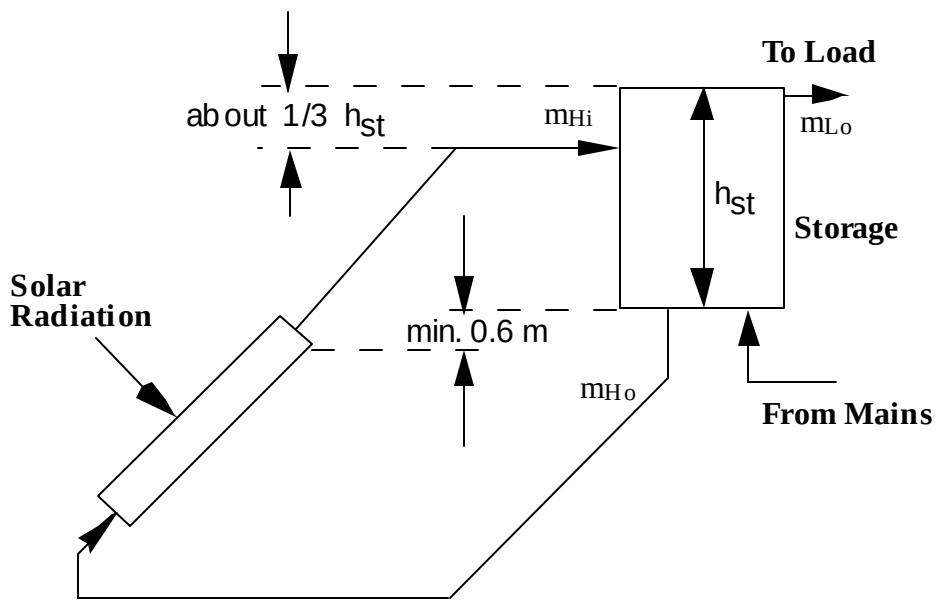

Fig. 2.5 Thermosyphon System

2.2.2 Hydrostatic Head

In the case of a thermosyphon system it is important to know the pressure difference between the inlet and outlet on both the collector and load side of the storage. Therefore the pressure drop between the tank top and the in- and outlets has been added as new outputs. Instead of a pump, this pressure drop could be the driving force for the natural convection of the working fluid through the collector into the tank. The pressure drop is calculated as following integral:

$$\Delta p = g \int_{H1}^{H2} \rho(T) dh \qquad (2.6)$$

In the multi-node model every node is fully mixed and has one temperature, so every node has a uniform density. With N nodes and the height of every node Δh, equation (2.6) can be approximated as

$$\Delta p = g \sum_{1}^{N} (\rho_i(T_i)\, \Delta h_i) \tag{2.7}$$

The temperature dependent density of water is calculated for every node with the function in (2.8) which approximates the relationship between the water temperature and its density:

$$\begin{aligned} \rho(T) = (&9.9998396\,E\,2 + 1.8224944E\,1\,T_i - 0.0079221\,T_i^{\,2} \\ &- 5.544846E - 5\,T_i^{\,3} + 1.497562E - 7\,T_i^{\,4} \\ &- 3.932952\,E - 10\,T_i^{\,5}) / (1 + 1.8159725E - 2\,T_i) \end{aligned} \tag{2.8}$$

Fig. 2.6 shows a plot of (2.8).

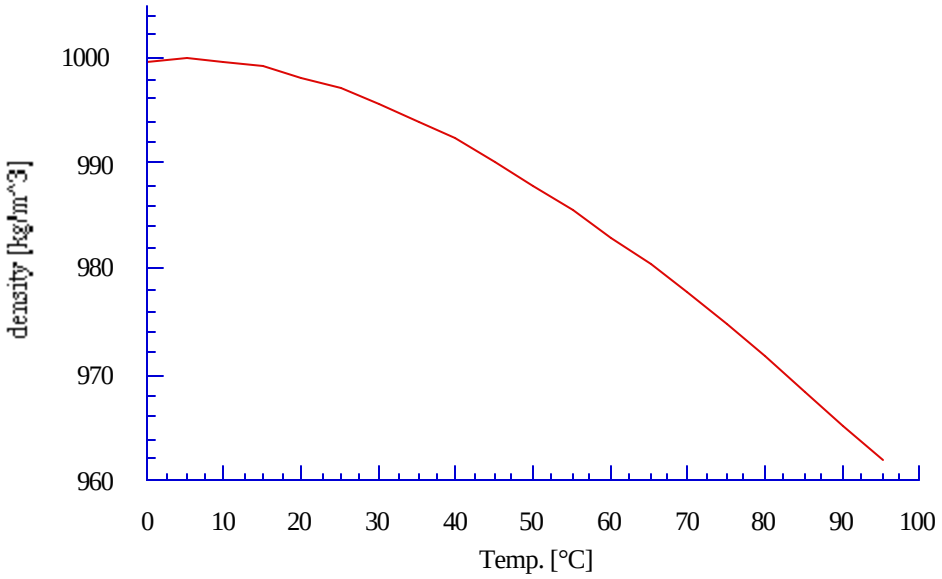

Fig. 2.6 Approximated Function for the Density of Water over the Temperature

2.3 Tank Flue Losses

In the old model there is one output for the tank losses. This includes the losses to the environment, and if a gas auxiliary is specified in the user deck, the losses to the exhaust flue of an in-tank gas auxiliary heater. The overall heat loss coefficient to the gas flue, UA_{gfl}, and the average flue temperature, T_{gfl}, when the heater is not operating, have to be specified by the user. The new model outputs the losses to the environment separately from the tank flue losses. These offer a better overview of the storage tank losses during the times when the gas auxiliary heater is off.

2.4 Tanks with Non Cylindrical Cross Section

To extend the possibility of simulating tanks with different geometric structures, tanks with any uniform cross section can be simulated in the new model. A cylindrical cross section provides the smallest tank surface area and therfore smaller energy losses than other tank shapes. The energy losses to the environment $\dot{Q}_{env}$ for a tank with the perimeter Per_t , is given by:

$$\dot{Q}_{env} = \sum_{i=1}^{N} U_i Per_t H_i (T_i - T_{env}) + V_t / H_t (U_{bot}(T_N - T_{env}) + U_{top}(T_1 - T_{env})) \quad (2.9)$$

The user has the option to specify the heat transfer coefficient of every node. This option provides the possibility of considering nodes with different heat loss coefficients, e.g. at the nodes where the tank inlets and outlets are located. Because this nodes normally have a larger heat loss coefficient as other tank nodes. The sum of the energy loss of every node plus the losses through the bottom and top area of the tank yield the tank losses to the environment.

To calculate the losses to the environment with non-cylindrical tanks, the user has to specify the perimeter of the tank cross section. If the tank is cylindrical the parameter input has to be specified as any negative number and the program automatically calculates the perimeter.

CHAPTER 3

Systems Simulations with the Modified Model

In this chapter simulations with the modified tank model have been developed. The following examples of systems demonstrate the performance of a solar water heater for a selected location and month (Boulder, March 1994). Basically the system performances consist of a flat-plate collector, fluid thermal water storage, pump, a controller which activates the pump and a water supply from the mains. The simulations are based on following data:

The weather data are hourly values of solar radiation and ambient temperature of the second week in January 1994 at the 40°N Latitude (Boulder). The solar collector consists of one glass cover, and has an area of 6.5 m^2. The collector has a slope of 40° and faces directly south. The working fluid in the collector loop is water, and the pump in the collector loop operates with a flow rate of 300 kg/hr. The pump which supplies the load and the main flow into the storage provides a flow rate of 21.4 kg/hr. To turn the collector pump on or off, a controller senses the collector inlet and outlet temperature. It is desireable to have the pump remain off until the collector outlet water temperature is at least 10°C above the inlet water temperature. The upper dead band is 10°C and the lower dead band is 1 °C. The tanks have an overall loss coefficient, U_L, of 0.4 W/(K m^2) or 1.44 kJ/(hr °C m^2) in TRNSYS units. The initial tank temperature is 60°C and the ambient temperature around the tank is 21°C. The load draws 300 kg of water per day evenly distributed in a constant flow of 21.43

kg/hr over the day from 7:00 a.m. to 9:00 p.m.. The water from the main has a temperature of 15°C.

3.1 Unequal Inlet and Outlet tank Flows

Tanks with flows, as described in chapter 2.1.3, where the outlet and inlet flows from and to another component, are different can now be simulated with the modified TYPE 4 tank model.

3.1.1 Tank without a Cold Inlet Flow

Fig. 3.1 shows a diagram of a system performance without a direct cold flow into the storage and a flow from the mains directly into the collector loop. The mains flow and the outlet flow m_{Ho} will be mixed together before entering the collector.

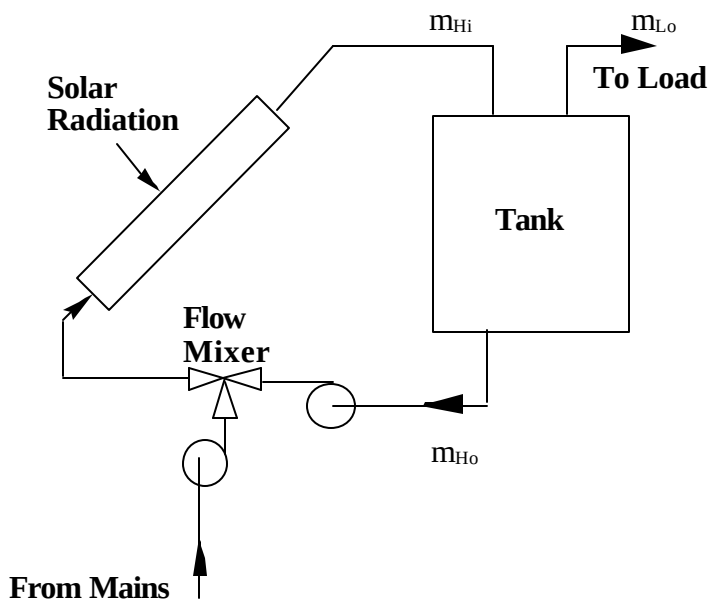

Fig. 3.1 System Configuration with a Tank without a Cold Inlet Flow

To simulate the system performance, a flow mixer is added to the components indicated above. The flow mixer simulates the function of a teepiece which completely mixes two inlet streams of the same fluid at different temperatures. The storage tank model has 3 nodes. The inlet and outlet to the heat source are located in the top and bottom node, and the outlet to the load in the top node. The storage is calculated with that mode which guarantees the best stratification. Fig. 3.2 shows the node temperatures of the tank; TOP, MID and BOT with the collector temperature COLL over time.

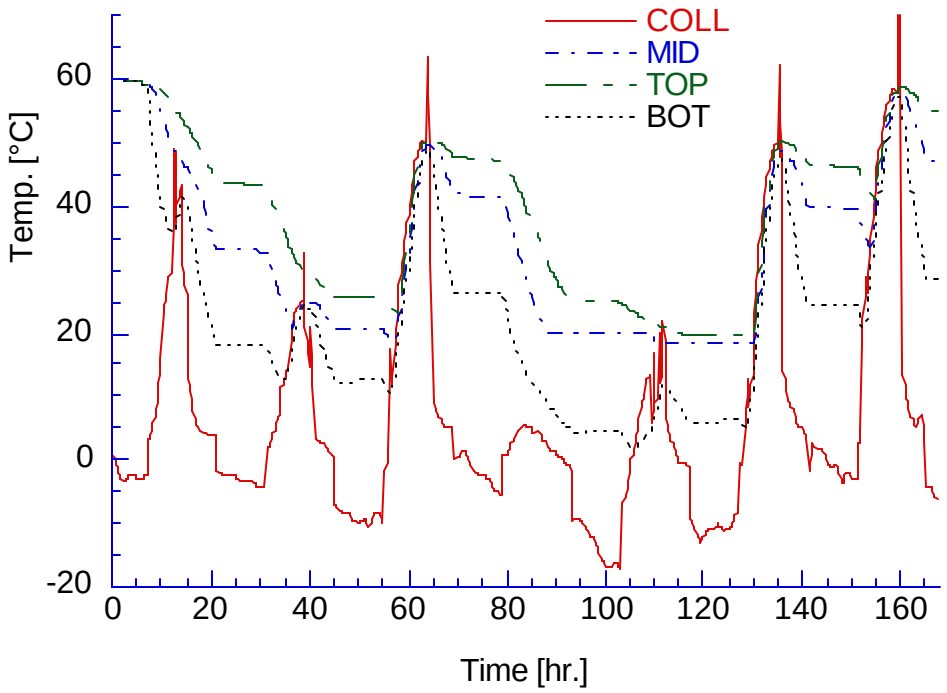

Fig. 3.2 Collector and Node Temperatures of the Tank without a Cold Inlet Flow

In those periods when the storage pump is off and the load pump is on, the temperatures of the tank nodes decrease relatively fast. Whenever the main pump is off the node

temperatures decrease only slightly due to the losses to the environment. While the storage pump is running the high internal mass flow in the tank, mixes the node temperatures so that they are almost equal. Fig. 3.3 shows the flowrate through the collector, COLL, and the lower time dependent load flowrate, LOAD, every day from 7:00 a.m. to 9:00 p.m..

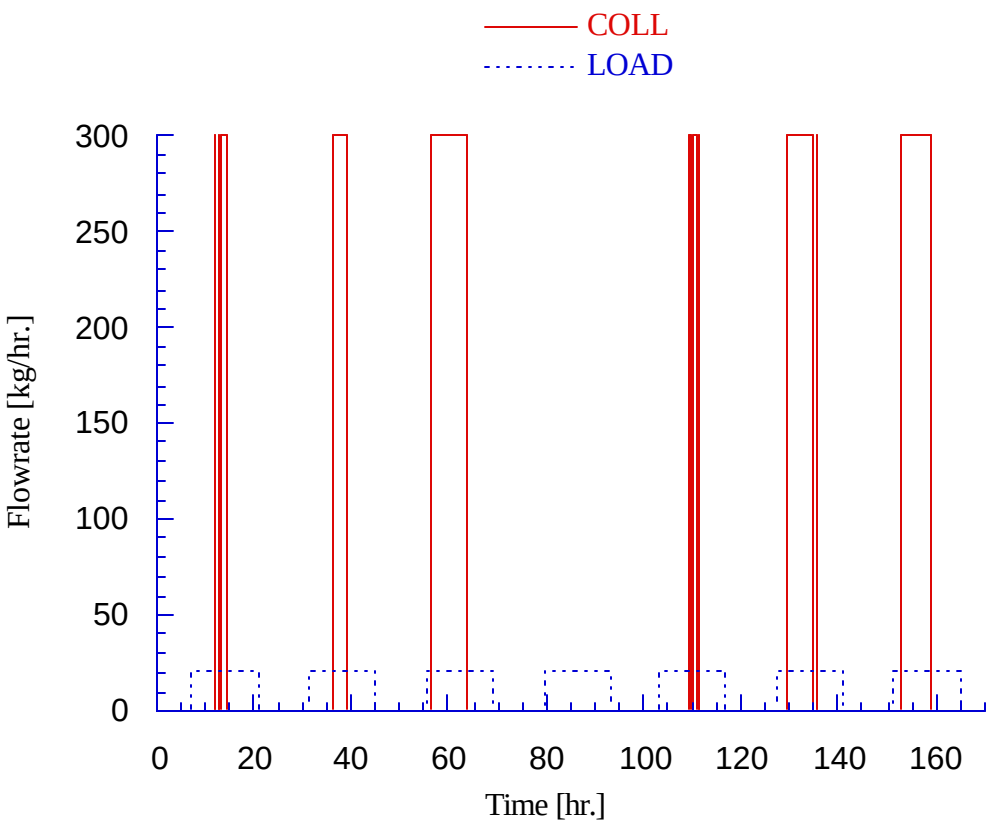

Fig 3.3 Collector and Main Flow Rates

Whenever the main pump runs and the collector temperature is lower than the main flow temperature (15 °C), the system works as a chiller. Therefore, when the main pump is running, such a system performance only makes sense if the collector temperature is higher

than the temperature of the mains. The same holds true if the temperature of the mains is lower than or equal to the environmental temperature. However, the system simulation could show the proper mass flow calculations of the new tank model.

3.1.2 Two Tank System

A system performance which makes more sense for practical applications, is a system with 2 connected tanks (Fig. 3.4). One collector tank has a cold flow from the mains and an outlet flow to the heat source and an auxiliary tank without a cold flow in and without an outlet flow to the heat source. Both tanks are simulated with a volume of 0.39 m^3.

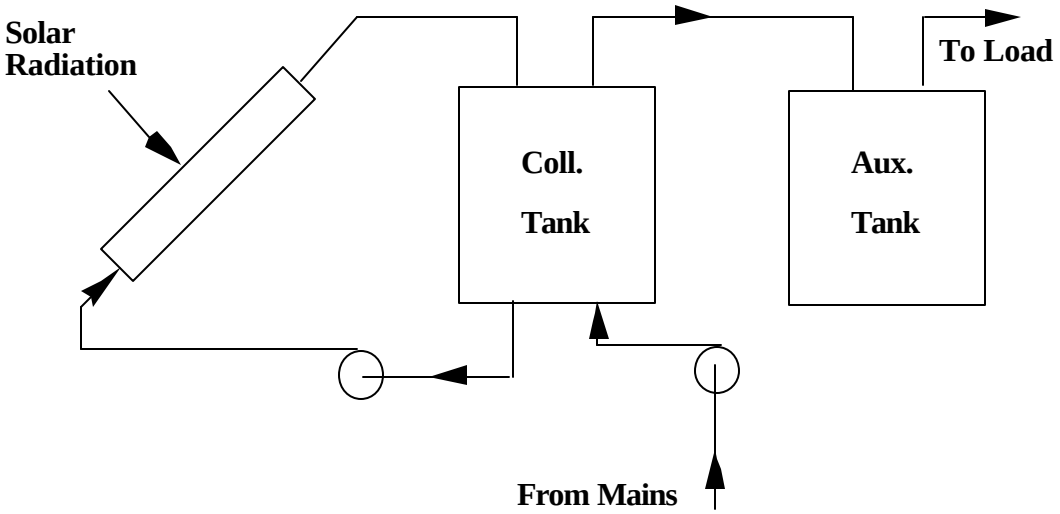

Fig 3.4 System Performance with Two Storage Tanks

The simulated results of this system performance demonstrate that this type of system can supply significantly more energy to the load than a single collector tank with the same total

storage volume. Fig. 3.5 shows the temperatures of the auxiliary- and collector tank over the simulation time of one week.

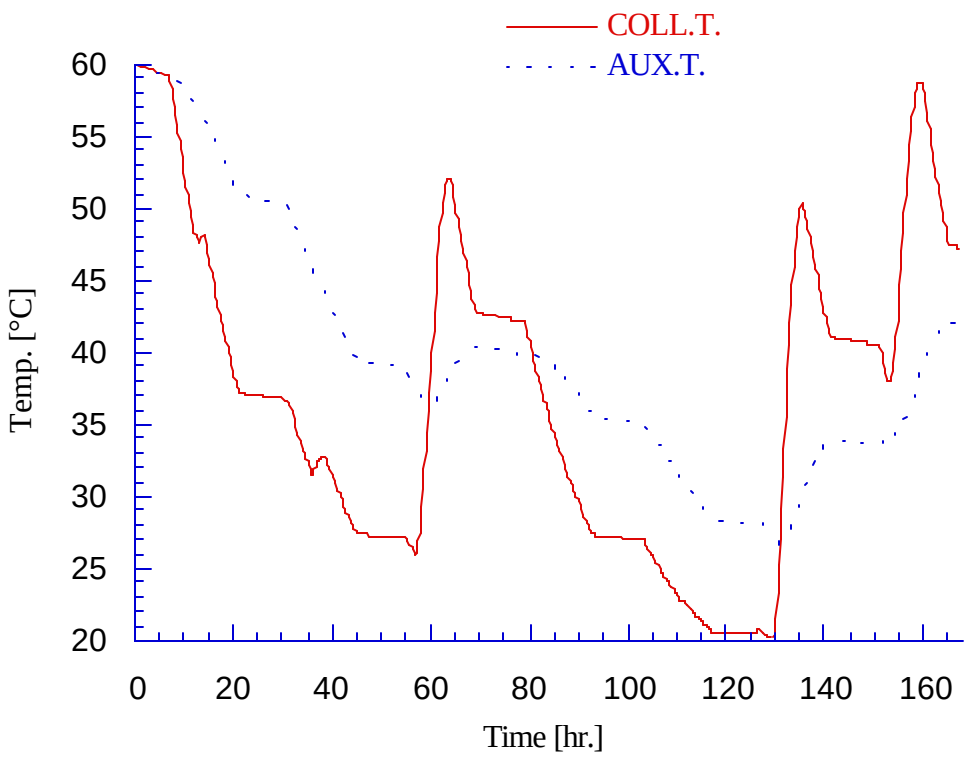

Fig. 3.5 Auxiliary and Collector Tank Temperature Profile

Both tanks are simulated as fully mixed tanks. The temperature distribution between the two tanks is considerable. The auxiliary tank temperature curve is much smoother than the curve of the collector tank temperature. The auxiliary tank also usually has a higher temperature than the collector tank, especially whenever the tank pump is not running.

Fig 3.6 shows the temperature profile of the collector tank (COLL.T.) and the auxiliary tank (AUX.T.), compared with the average temperature of a larger three node tank (LG. T.) in a

one tank system simulation with the same data and the same storage volume, but without the auxiliary tank.

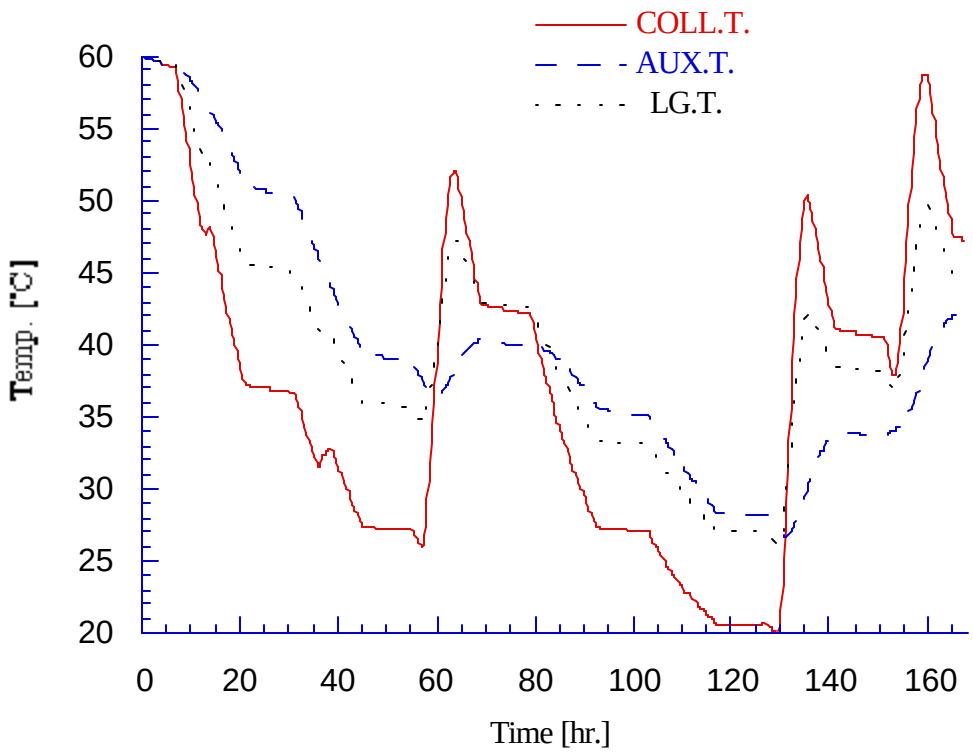

Fig. 3.6 Temperature Profiles for a One Tank and a Two Tank System

The average temperature of the larger tank almost always lies between the temperature of the auxiliary and that of the collector tank. While the main (load) pump is running (7:00 a.m. - 9:00 p.m.) and the storage pump is off, the auxiliary tank temperature is higher than the other two tank temperatures.

Fig. 3.7 shows the rate at which energy is removed from the auxiliary tank of the one tank system compared to that of the large tank of the one tank performance to the load. Both systems are calculated with the same weather, collector and load data. Even though the large tank was calculated as a stratified three node tank, and the auxiliary tank and collector tank were simulated as fully mixed tanks, the auxiliary tank supplies more energy to the load than the large single tank. This increase in performance is due the fact that the collector tank dampens out the temperature spikes in the auxiliary tank. Thus the average temperature in the auxiliary tank, which supplies the load, is higher than in the larger tank.

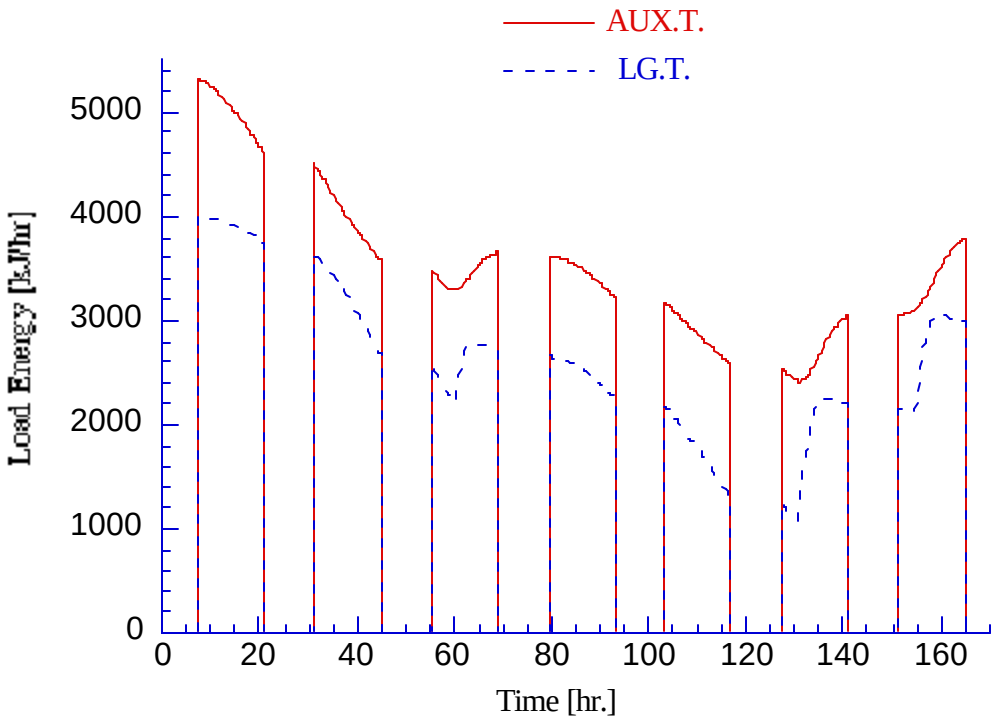

Fig. 3.7 Energy Supply to the Load from the Auxiliary Tank and the Larger Tank

3.2 Multiple Outlet Positions

Two simulations were performed with the four node tank system shown in fig. 3.8; one with the inlets and outlets at the top and bottom node and the other with the inlets and outlets at the second and the bottom node.

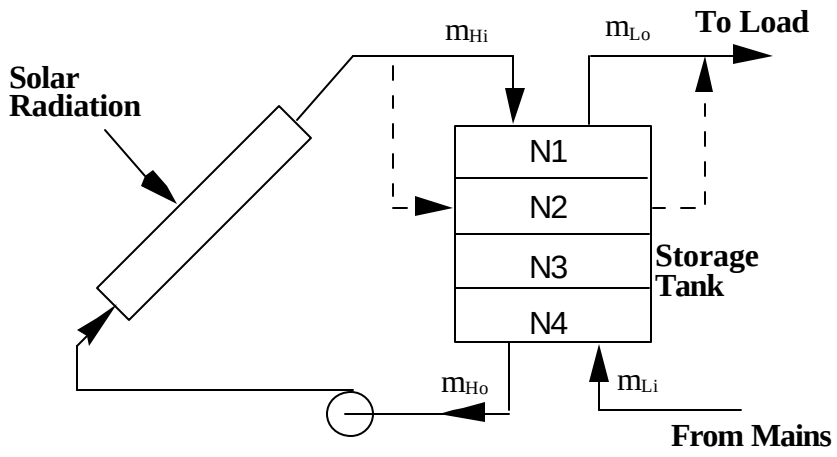

Fig. 3.8 System with Multiple Tank Inlets and Outlets

Fig. 3.9 shows the tank temperatures for the system with the inlets and outlets in the top and bottom node. In the previous model the outlets were always located in this positions. The flow stream goes through every node during the charging and discharging periods of the tank, thus decreasing the temperature stratification of all four nodes during charging and discharging periods.

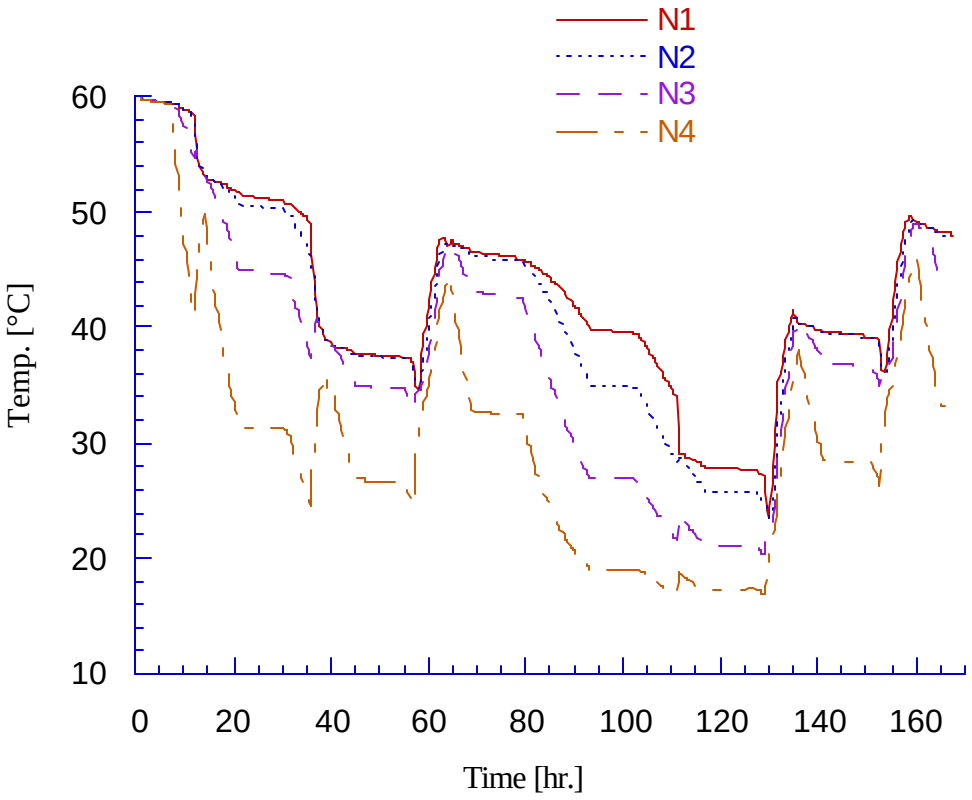

Fig. 3.9 Temperature Distribution with the Inlet and Outlet at the Tank Bottom and Top

Fig. 3.10 shows temperatures for a system similar to the one above but with the load outlet and the collector inlet in the second node. In this configuration, there is no flow stream in the first node. The temperature of the first node decreases only because of the losses to the environment. The result is, that the first and the second node temperature deviate up to 20 °C or more during the discharging periods. In reality the temperature profile at the tank top would be much more similar to the rest of the tank, due to the momentum of the incoming flow. Also the temperature deviation between the colder fluid near the wall and the hotter

fluid in the center would result in a difference of density, which in turn would produce a natural flow inside the tank.

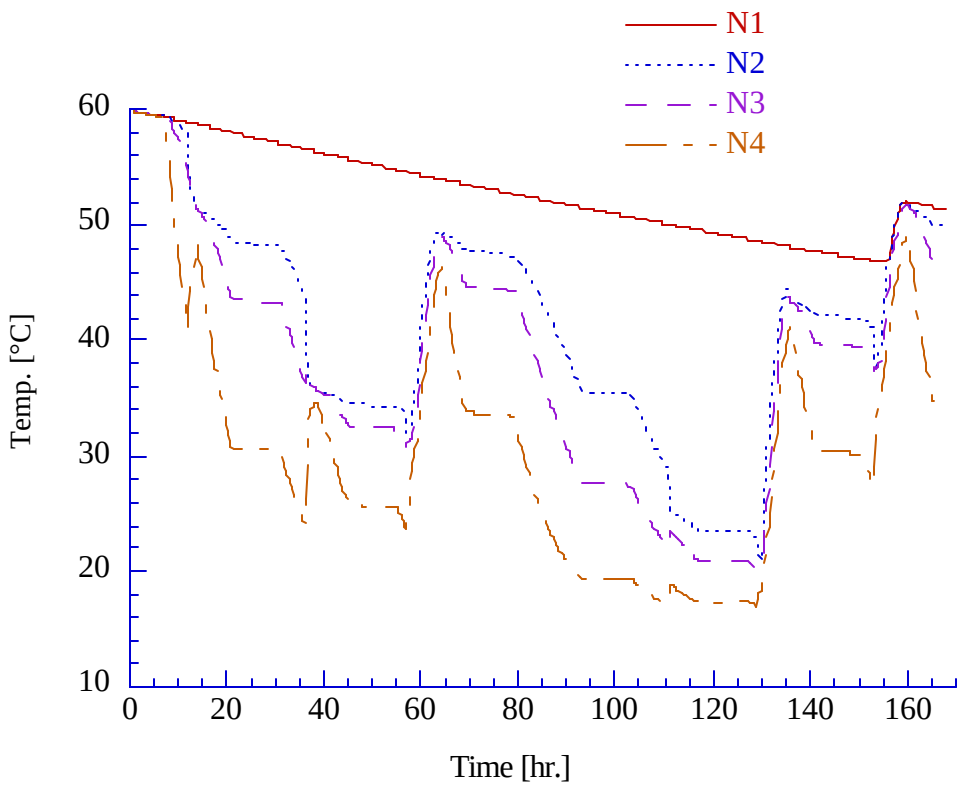

Fig. 3.10 Node Temperatures with the Inlets and Outlets in the Second and Bottom Node

3.3 Effective Convection and Conduction

In the new TYPE 4 model the user has to specify the conductivity of the tank fluid k_{fl} and an additional factor Δk_{eff}, which models mixing during charging and discharging and the natural convection into consideration. If only the low heat conduction of water k_w (0.6 W/(m K)) is used there is almost no change in the temperature curves; it is actually negligible. The node

Temperatures in the diagram in Fig. 3.11 are calculated with the conduction of water $cond_w$ and an effective convection factor Δk_{eff} of 50.

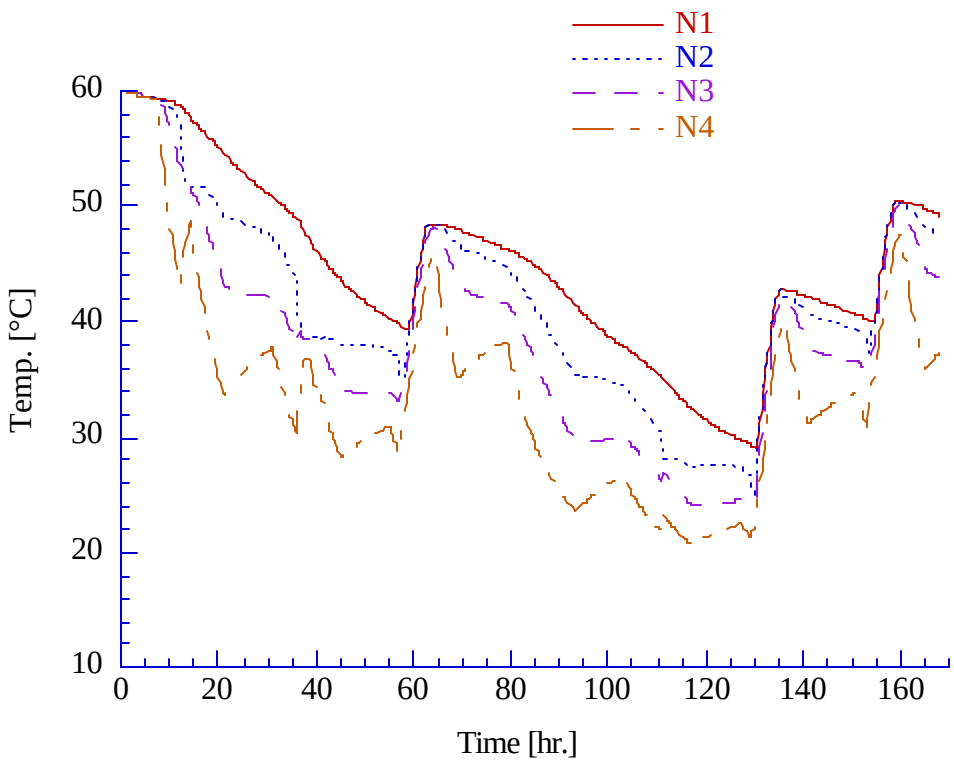

Fig. 3.11 Effective Convection Factor Δk_{eff} of 50

In Fig. 3.9 and Fig. 3.10 one can well differentiate the periods without any flow stream as almost horizontal parallel lines in the temperature curves. Compared to this the temperature curves calculated with an effective convection factor of 50 (Fig. 2.14) are much smoother. Due to the higher mixing of the node temperatures, the periods of non flow are barely distinguishable.

In Fig. 3.12 the same calculation was made with an convection factor Δk_{eff} of 100.

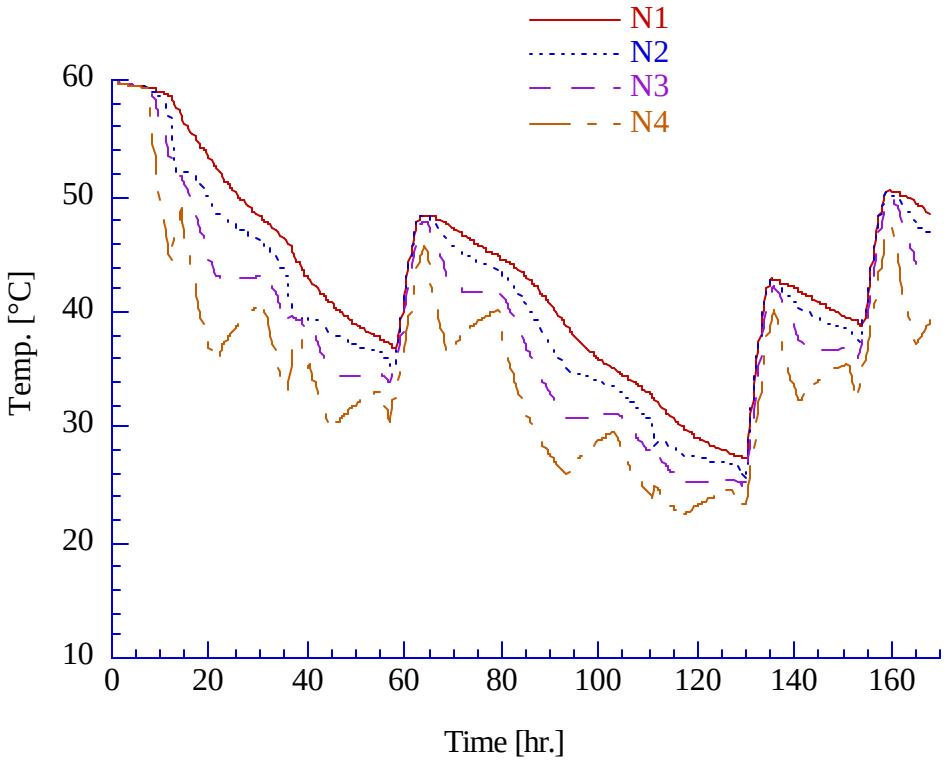

Fig. 3.12 Effective Convection Factor Δk_{eff} of 100

Which effective convection factor Δk_{eff} is needed, depends on the conditions under which the tanks operates, e.g. if it is a low or high flow system, if the natural convection due to the tank wall is high or low. One should also take the plume entrainment into consideration, which will cause destratification. Plume entrainment occurs most often in the late afternoon when the availability of solar energy has decreased and the top of the tank is still hot. Destratification results when the incoming fluid is cooler than the upper portion of the tank. As a result, buoyancy force will drive the incoming fluid down the tank and causes mixing.

3.4 Tank Flue Losses

Fig. 3.13 shows a tank, which has an in-tank gas auxiliary heater. In the case of a gas heater, the user has to specify the temperature of the gas flue, T_{gfl}, and the total conductance for heat loss to gas flue, UA_{gfl}, during the times when the heater is not operating.

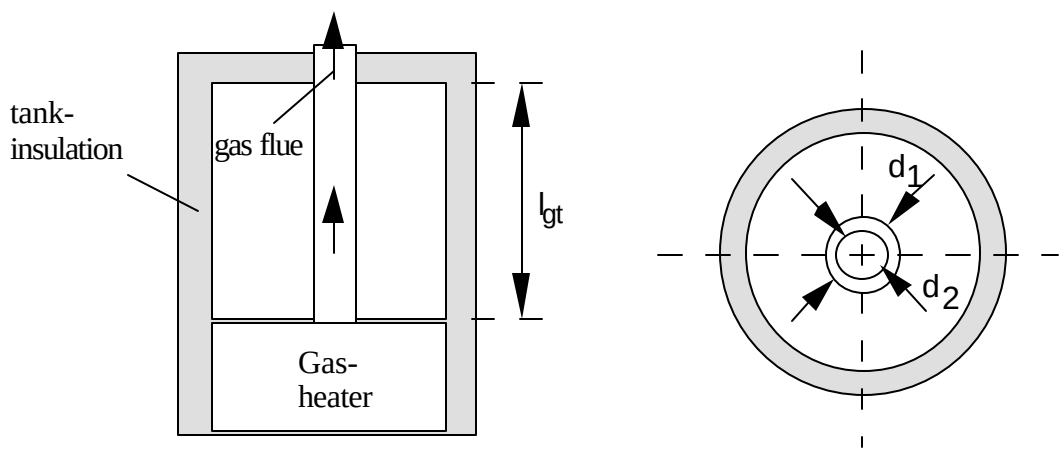

Fig. 3.13 Tank Example with a Gas Auxiliary Heater

An example of a tank simillar to the one in fig. 3.13 is made. For a cylindrical tube:

$$\frac{1}{UA_{gfl}} = \frac{1}{h_i A_i} + \frac{\delta}{k A_m} + \frac{1}{h_o A_o} \tag{3.1}$$

The free convection coefficents for gas inside, and water outside, the tube were choosen to be:

$$h_i = 10 \frac{W}{m^2 K} \qquad \text{and} \qquad h_o = 500 \frac{W}{m^2 K} \tag{3.2}$$

Assuming the material for the tube for the exhaust flue is stainless steel (AISI 304) with an average conductivity k, for temperatures between 200 K and 400 K:

$$k = 14.6 \frac{W}{K\ m} \tag{3.3}$$

The inside, outside and middle areas for the heat transfer are:

$$A_i = \pi d_1 l_{gt} \quad A_o = \pi d_2 l_{gt} \quad A_m = \frac{A_o - A_i}{\ln\left(\frac{A_o}{A_i}\right)} \tag{3.4}$$

With the following dimension for height, diameters and wall thickness of the tube :

$$l_{gt} = 1.5\,m \quad d_1 = 10\ cm \quad d_2 = 9.6\ cm \quad \delta = 2\,mm$$

The overall conductance for heat loss to gas flue when the auxiliary is not operating becomes:

$$UA_{gfl} = 4.4 \frac{W}{K} \qquad \text{or} \qquad 16 \frac{kJ}{hr.\,°C}$$

A single tank without any other system components was simulated. The water inside the tank has a volume of 3 m^3, and is divided into 5 nodes, all of which have an initial temperature of 60 °C. An auxiliary heater with a maximum heating rate of 16 000 kJ/hr. is located in the bottom node. The set temperature, T_{set}, of a thermostat in the fifth node is 50 °C and the dead band temperature is 10 °C. A constant flow at a rate of 50 kg/hr and a temperature of 30°C is entering the tank in the bottom node. The same flow rate is leaving the tank in the top

node. The overall heat loss coefficent per unit area, U_t, is 1.5 kJ / (hr. m^2 °C) and the total conductance for heat loss to the gas flue when auxiliary is not operating, UA_{gfl}, is 16 kJ/(hr. °C), as was calculated above. As seen in Figs. 3.14 and 3.15 the heater turns on when the bottom node, which is specified as thermostat location for the auxiliary, reaches the temperature of 40 °C (T_{set}-T_{db}).

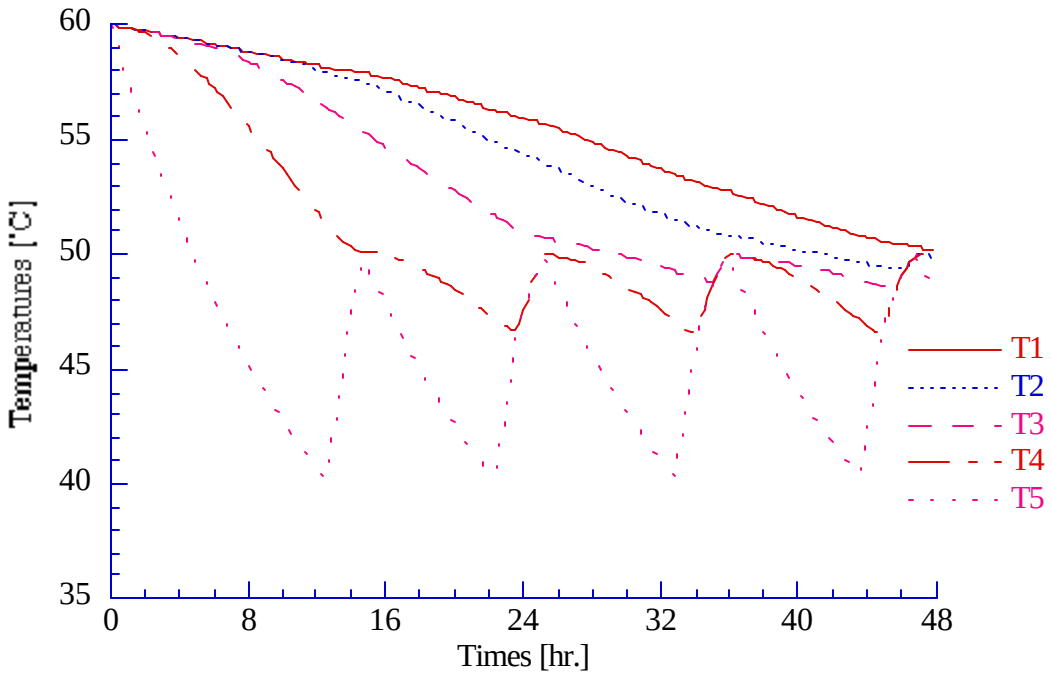

Fig. 3.14 Node Temperatures

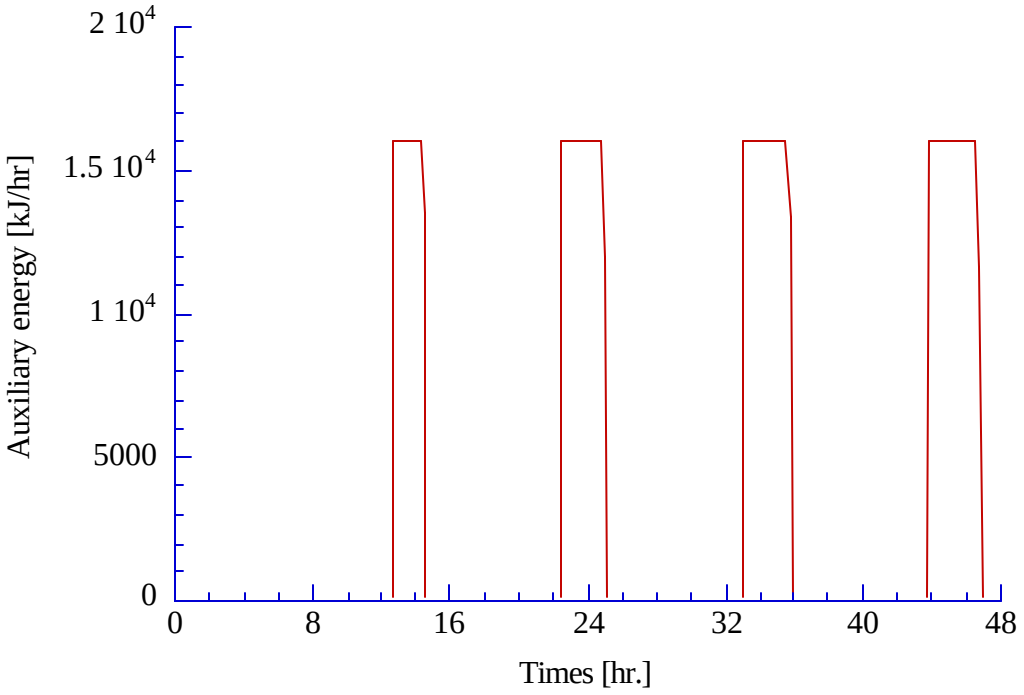

Fig. 3.15 Auxiliary Energy Added by the Gas Auxiliary Heater

The auxiliary is switched on and off four times during the simulation period of the second days. Fig. 3.16 is a graph of the tank losses. The times when the auxiliary is off, heat is transfered from the tank into the exhaust of the gas flue. The losses to the environment are decreasing and increasing with the average temperature of the nodes. Due to the increasing average node temperatures during the times when auxiliary is added, the losses to the environment are increasing in this periods too.

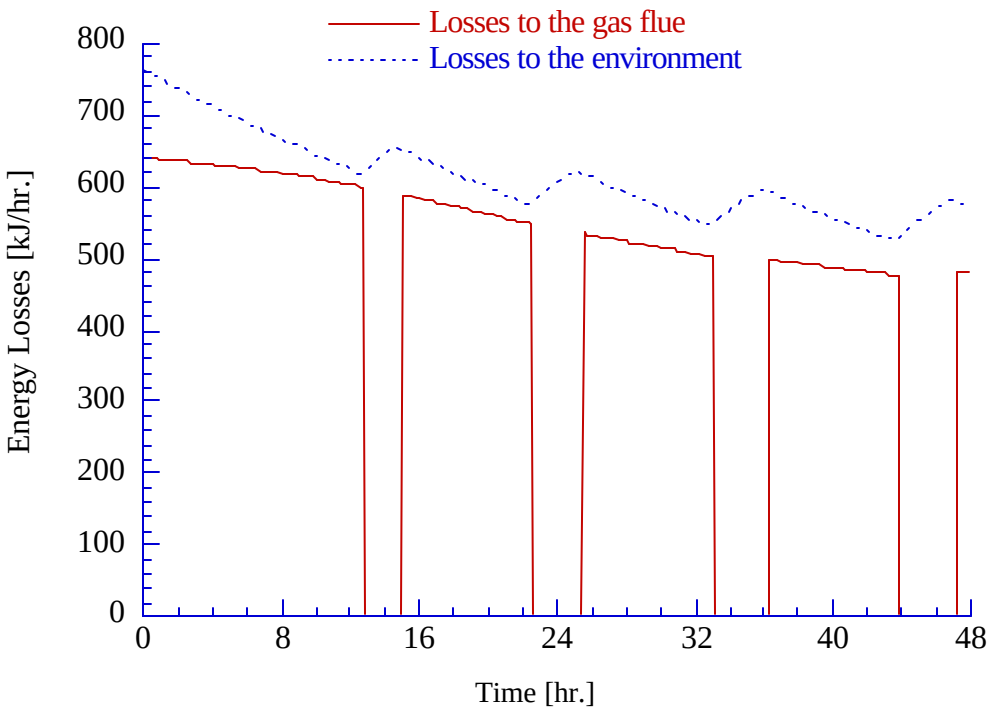

Fig. 3.16 Tank Losses

CHAPTER 4

Proposed Future Research

4.1 Parameters, Inputs and Outputs

The current version of the TRNSYS simulation package includes two different fluid storage models, based on different approaches. The multi-node model, which was modified during this project, and the plug flow model, which provides the maximum temperature stratification in the tank. Currently, the input and output files of the two models are different. This means that if the user wants to switch from one model to another, he/she would have to change the whole parameter and input list of the tank and also the inputs of the components which are connected to the outputs of the tank. Due to the advantages of one or the other model in several situations the user should have the capability to switch easily from one to the other model. This is also important to compare a simulation system including the plug flow model with one including the multi-node model. Ideally changing from one tank model to another could be performed by just changing the type number in the TRNSYS deck.

4.1.1 Introduction to the Plug Flow Model

Kuhn [11, 12] developed a stratified fluid storage tank model which is based on the assumption of plug flow of the fluid up or down in the tank. During charging or discharging of the tank, increments of volume segments of fluid from either the collector or load enter the tank at an appropriate location. The incoming segments of liquid are assumed to shift the position of all existing segments in the tank between the inlet and the return. The size of a segment depends on the flow rate and the time increment used in the computation. Fig. 4.1 illustrates the concept of the model.

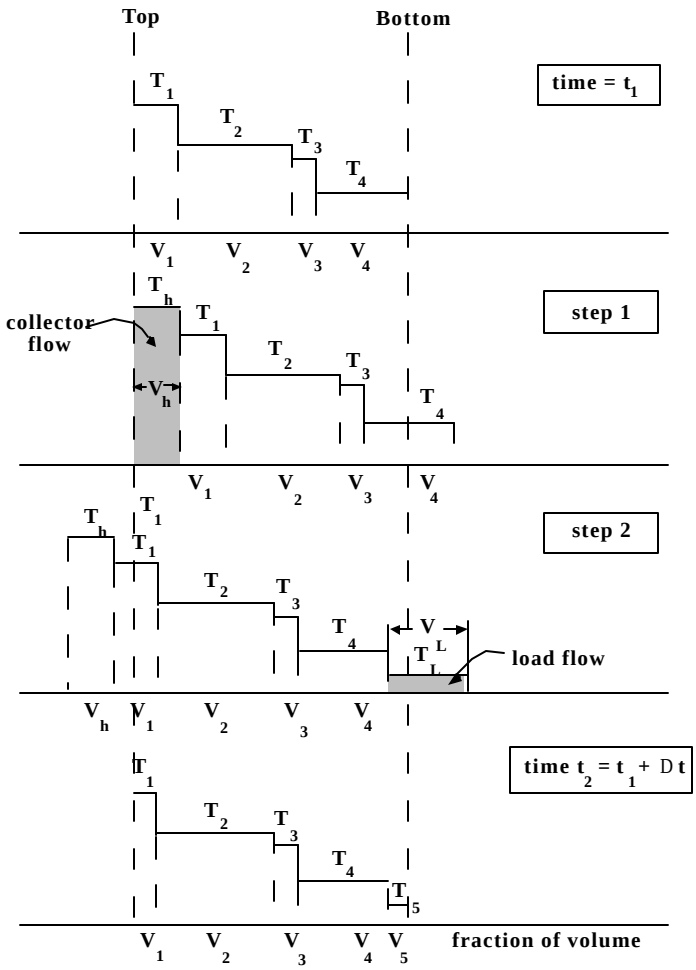

Fig. 4.1 Concept of the Plug Flow Model [11]

In the example of Fig. 4.1, the tank is initially divided into four segments of Volume V_i. In one time step, the heat source delivers a volume of liquid, V_{heat}, equal to $\dot{m}_{heat}\Delta t / \rho_f$ at a temperature T_{heat} . Assuming that T_{heat} is greater than T_1, then a new segment is added at the top of the tank and the entire profile is shifted down. At the same time, a volume of fluid, V_{load}, returns from the load, with V_{load} equal to $\dot{m}_{load}\Delta t / \rho_f$ and temperature T_{mains} is less than T_4, then a segment is added at the bottom of the tank and the whole profile is shifted upward. Step one and two are shown sequentially although they occur simultaneously. The net shift of the initial profile is equal to the difference between the total heat source volume and load volume, V_{heat}-V_{load} (downward if positive). The segments and/or fractions of segments whose positions fall outside the bounds of the tank are returned to the heat source and load. The plug flow model provides a tank with maximum temperature stratification and tends rather to over predict the energy output.

4.1.2 Parameters in the Multi-Node and the Plug Flow Model

A component may receive three types of information: inputs, parameters and time. The information flowing from the component is its output. The incoming data from other connected components (subroutines) is its input. Parameters of a TRNSYS component have to be specified by the user and are constant over the entire simulation time. For example, in the case of a storage the volume and height, the fluid density etc. would be entered as parameters. Due to the unequal options in the type 4 multi-node model and the type 38 plug flow model, the number of parameters in each model are unequal. For example the multi-node model offers two in-tank auxiliary heaters, while the plug flow model has so far only one auxiliary heater. The multi-node model has the capability to specify the height and heat loss coefficient of every node, while the height of the plug flow segments can't be specified, they

are a function of inlet and outlet flowrate. To switch easily from one tank model to the other, the user should have to change as few parameters as possible. Therefore, either some options which are missing in one subroutine should to be added to the other or the additional parameters of one tank model should be placed at the end of the parameter list. If the number of parameters includes this optional parameters they are read by the code otherwise they are just ignored. In case of the in-tank auxiliary heater, it would be preferred to add a second heater to the plug flow model, Thus extending the capabilities of the model. The option of multiple node heights and node heat loss coefficient can't be added into the plug flow model because the plug segments are calculated automatically inside the code. Therefore, this option should be specified through control functions, which are parameters themselves, as on/off options. Two parameters in the parameter list could look like following:

31	α	control function for height of nodes
		1 - user specified heights of nodes
		0 - all nodes have the same height
32	β	control function for incremental heat transfer
		1 - user specified node heat transfer coefficient
		0 - all nodes have the same heat transfer coefficient

If either one of the specified control functions α or β are 1, the user specified node height and/or the incremental heat transfer coefficient of each node has to be added in the parameter list.

4.2 Tank Model with Indirect Charging and Discharging

Indirect charging of a storage means that the fluid flowing through the collector loop, is separated from the storage fluid either by an external or an in-tank heat exchanger. If the load flow is separated by an heat exchanger from the fluid in the storage, this is called indirect discharging. Even though direct charging and discharging of a tank yields a higher effectiveness, tanks in colder regions, where the water in the collector loop could freeze, require a working fluid containing antifreeze. Therefore the drinking water in the load loop must be separated from the water with antifreeze by a heat exchanger. There are different ways to combine the storage with the heat source, HS, and the load. Fig. 4.2 shows some possibilities: In a) the storage is charged and discharged directly. In b), c) and d) charging and/or discharging are performed with external heat exchangers. In b) the tank is charged directly and discharged indirectly. In c) it is vice versa and in d) both loops are separated by heat exchangers. e) and f) show the same configurations but with internal heat exchangers integrated in the tank. Systems a) through d) could be simulated with the current type 4 tank model and a TRNSYS heat exchanger component. d) through e) can't be simulated because the current tank model includes no in-tank heat exchangers. A new model that includes in-tank heat exchangers is being developed.

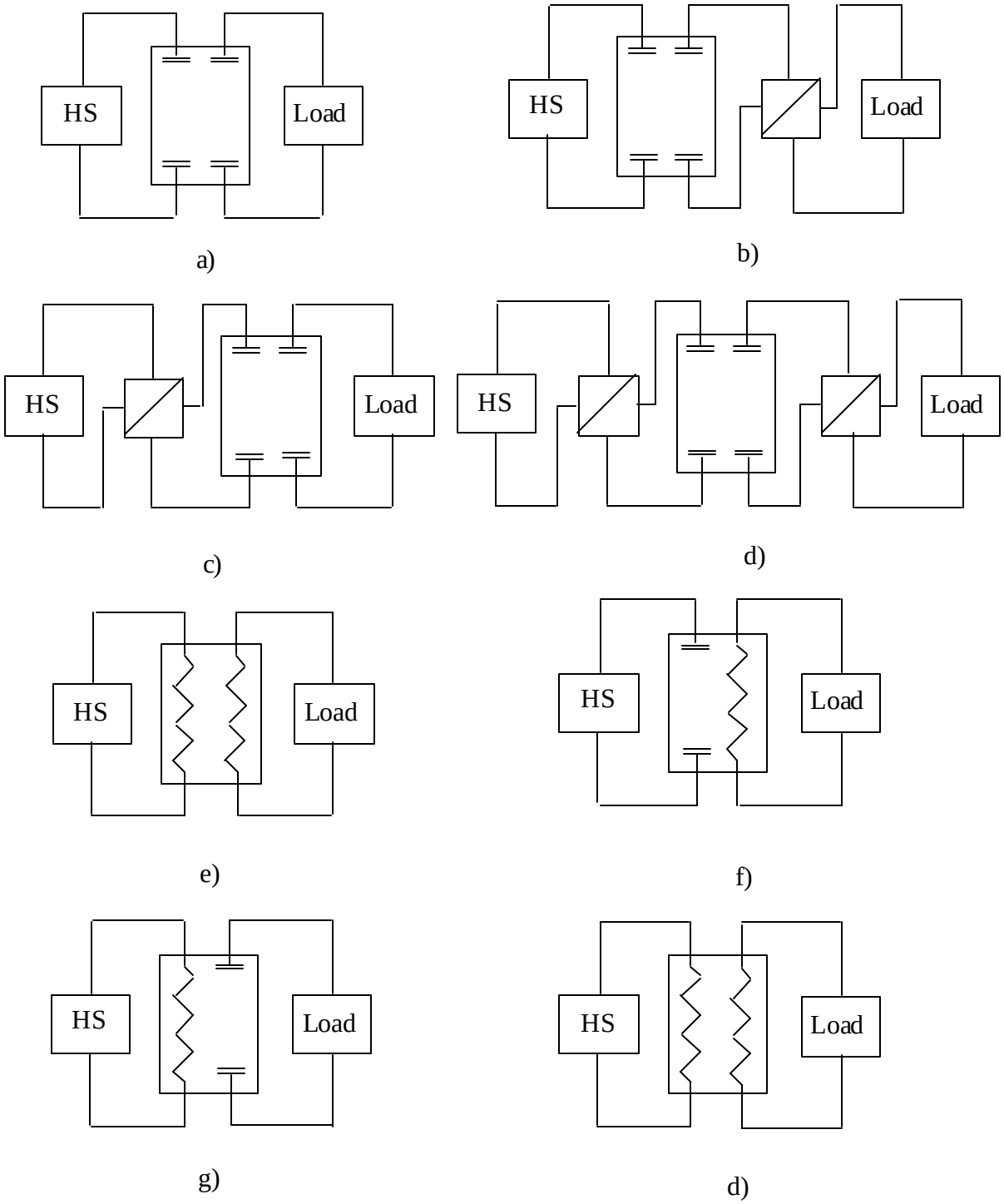

Fig. 4.2 System Configurations with a Fluid Storage Tank

References

[1] W.A. Beckman and J.A. Duffie; Solar Engineering of thermal processes, John Wiley & SONS, Inc., 1991, pp. 382, 385, 388

[2] Francis de Winter; Solar Collectors, Energy Storage and Materials, MIT Press England, 1990, pp. 625, 692, 698

[3] E.Hahne, N.Fisch; class manuscript Solartechnik 1, ITW Universität Stuttgart 1993, pp.85

[4] M.K. Sharp and R.I. Loehrke; Stratified thermal storage in residential solar energy application, J of Energy, 1997, Vol. 3, pp. 106-112

[5] M.D. Wüstling, S.A. Klein, J.A. Duffie; Promising control alternatives for solar water heating systems, J. of Solar Energy Engineering, 1985, Vol. 107, pp. 215-221

[6] J.H. Davidson, D.A. Adams, J.A. Miller; A coefficient to characterise mixing in solar water storage tanks, 1994, Vol. 116

[7] S. Chandrasekhar; The stability of superposed fluids: The Kelvin Helmholtz Instability, hydrodynamic and hydromagnetic stability, Oxford University press, London 1961, pp. 382-427

[8] J.S. Turner; Buoyancy effects in fluids, internal mixing processess, Cambridge University press 1973, pp. 313 - 337

[9] W.B. Veltkamp; Thermal storage of solar energy, C. den ouden, ed., Martinius Nijhoff publishers, 1981 The Hague, pp. 61 - 72

[10] E.M. Kleinbach; Performance study of One - Dimensional Models for Stratified Thermal Storage Tank, Master thesis, University of Wisconsin - Madison,, 1990, pp. 13

[11] S.A. Klein et al.; TRNSYS 14 Manual, 1994, 4.3.1-1

Appendix A: TRNSYS Component Configuration of the New TYPE 4

PARAMETER NO.		DESCRIPTION
1	N	Number of Nodes
2	Mode:	1 - max. stratification mode
		2 - user designated inlet positions

tank geometry

3	V_t	tank volume (m3)
4	H_t	tank height (m)
5	Per.	rectangular tank perimeter
		any negative number if cylindrical tank

inlet and outlet heights from bottom, if not existant less than zero

6	IN1	(coll.) inlet 1 (m)
7	OUT1	(coll.) outlet 1 (m)
8	IN2	(load) inlet 2 (m)
9	OUT2	(load) outlet 2 (m)

fluid and wall data

10	C_{pf}	fluid specific heat (kJ/kg°C)
11	ρ_f	fluid density (kg/m3)
12	U_t	overall tank loss coefficient per unit area (kJ/hr-m2-C)
13	k	thermal conductivity of fluid in tank (kJ/hr-m- C)
14	Δk	additional conductivity due to the conduction of the walls plus natural convection.
15	T_{boil}	boiling point temperature of fluid in storage tank (°C)

Auxiliary heaters (electric or gas)

Aux. heater 1

16	AuxMod	operation mode of auxiliary heaters 1=master/slave relationship where bottom element is enabled only when the top element is satisfied 2=both heaters can be on simultaneously
17	l_1	height of the first auxiliary heater (m) less than zero if not existant
18	l_{T1}	height of the first thermostat is located (m)
19	$T_{set,1}$	first thermostat set temperature (°C)
20*	$\Delta T_{dbu,1}$	first thermostat upper temperature deadband (°C)
21	$\Delta T_{dbl,1}$	first thermostat lower temperature deadband (°C)
22	$Q_{HE,1}$	maximum heating rate of first auxiliary heater (kJ/hr)

Aux. heater 2

23	l_2	height of the second auxiliary heater
24	l_{T2}	height of the second thermostat less than zero if not existant
25	Tset,2	second thermostat set temperature (°C)
26*	$\Delta T_{dbu,2}$	second thermostat upper temperature deadband (°C)
27	$\Delta T_{dbu,2}$	second thermostat lower temperature deadband (°C)
28	$Q_{HE,2}$	maximum heating rate of second auxiliary heater (kJ/hr)

Gas aux. heater

29	$(UA)_f$	total conductance for heat loss to gas flue when auxiliary is not operating (kJ/hr-°C)
30	T_{flue}	average flue temperature when auxiliary is not operating (°C)

* The upper deadband is not yet included. Insert any number.

Different height of nodes and different heat transfer coeff. of nodes

31	α	control function for height of nodes 1 - user specified heights of nodes 0 - all nodes have the same height
32	β	control function for incremental heat transfer coefficient 1 - user specified additional heat transfer coefficient (Par (12) + ΔU_i) 0 - all nodes have the same heat transfer coefiicient ($\Delta U_i = 0$)

If $\alpha = 0$ and $\beta = 0$ No more parameters are required

If $\alpha = 1$ or $\beta = 1$ then:

33	H_1	height of first node
34	ΔU_1	additional heat tranfer coeff. of first node
.	.	
.	.	
32 + 2N - 1	H_N	height of bottom node
32 + 2N	ΔU_N	additional heat tranfer coeff. of bottom node

INPUT NUMBER		DESCRIPTION
Mass flows:		
1	m_{IN1}	mass flow rate at inlet 1 (kg/hr)
2	m_{OUT1}	mass flow rate at outlet 1 (kg/hr)
3	m_{IN2}	mass flow rate at inlet 2 (kg/hr)
4	m_{OUT2}	mass flow rate at outlet 2 (kg/hr)
1 - 4		-1 = doesn't exist -2 = solve for this mass flow. One of the existing mass flows must be = -2
5	T_{IN1}	temperature of fluid at inlet 1 or less than zero if inlet 1 not existant (°C)
6	T_{IN2}	temperature of fluid at inlet 2 or less than zero if inlet 2 not existant (°C)
7	T_{env}	temperature of environment (°C)
8* (optional)	$\gamma_{htr,1}$	enable signal for first heating element
9* (optional)	$\gamma_{htr,2}$	enable signal for second heating element

OUTPUT NUMBER		DESCRIPTION
1	m_{IN1}	mass flow at inlet 1 (kg/hr)
2	m_{OUT1}	mass flow rate at outlet 1 (kg/hr)
3	m_{IN2}	mass flow at inlet 2 (kg/hr)
4	m_{OUT2}	mass flow rate at outlet 2 (kg/hr)
5	T_{OUT1}	temperature at outlet 1 (°C)
6	T_{OUT2}	temperature at outlet 2 (°C)

---

* Typically input from external controller or TYPE 14 forcing function. Default value is 1.

7	Q_{env}	rate of energy loss to the environment (kJ/hr)
8	Q_{in1}	energy input rate to tank at inlet 1 (kJ/hr)
9	Q_{out1}	rate at which energy is removed at outlet 1 (kJ/hr)
10	Q_{in2}	energy input rate to tank at inlet 2 (kJ/hr)
11	Q_{out2}	rate at which energy is removed at outlet 2 (kJ/hr)
12	Q_{aux}	rate at which auxiliary energy is added by the internal heaters (kJ/hr)
13	$Q_{aux,1}$	rate at which auxiliary energy is added by the first internal heater (kJ/hr)
14	$Q_{aux,2}$	rate at which auxiliary energy is added by the second internal heater (kJ/hr)
15	Q_{fl}	energy losses into the flue of the auxiliary heater
16	DE	internal energy change of the tank (kJ)
17	T_a	average storage temperature (°C)
18	ΔP_{IN1}	pressure diff. between tank top and inlet 1
19	ΔP_{OUT1}	pressure diff. between tank top and outlet 1
20	ΔP_{IN2}	pressure diff. between tank top and inlet 2
21	ΔP_{OUT2}	pressure diff. between tank top and outlet 2
22	T_1	temperature of first node (tank top) (°C)
.	.	
.	.	
21 + N	T_N	temperature of Nth node (°C)

DERIVATIVE NO.		DESCRIPTION
1- N	$T_{1 - N}$	initial temperature of the fluid in the tank segments (°C)
.	.	

Appendix B: TRNSYS - Decks. . .

Deck 1:

```
ASSIGN \TRNSYS14\MIKE\EX2BM1.LST    6
ASSIGN \TRNSYS14\MIKE\EX2BM1.PLT   11
ASSIGN \TRNSYS14\MIKE\EX2BM1.OUT   12
ASSIGN \TRNSYS14\WEATHER\WINTER.DAT 10

* * * * * * * * * * * * * * * * * * * * * * * * * * * * * * * * * * *
*
*    EXAMPLE FOR A SYSTEM WITHOUT A COLD TANK INLET FLOW
*    SOLAR RADIATION AND AMBIENT TEMPERATURE OF THE
*    SECOND WEEK IN JANUARY 1994 IN BOULDER (COLORADO)
*
* * * * * * * * * * * * * * * * * * * * * * * * * * * * * * * * * * *

SIMULATION 0. 168. 0.25
WIDTH 72

UNIT 9 TYPE 9 CARD READER
PARAMETERS 11
2  6  1.0   -5 41.868 0.0   6 0.555556 -17.7773  10  -1

UNIT 16 TYPE 16 SOLAR RADIATION PROCESSOR
PARAMETERS 9
3 1 1 8 40. 4871. 0. 2  1
INPUTS 6
9,5  9,19  9,20  0,0  0,0  0,0
0.0  0.0   0.0   0.7   40.  0.0

UNIT 1 TYPE 1 COLLECTOR
PARAMETERS 14
1 1 6.5 4.19 1 50 0.7 15 0.0 -1 4.19 1 0.1 0.0
INPUTS 10
11,1 11,2 11,2 9,6 16,6 16,4 16,5 0,0 16,9 16,10
60. 0.0 0.0 1.1 0.0  0.0  0.0  0.7 0.0  40.0

UNIT 2 TYPE 2 PUMP CONTROLLER
PARAMETERS 4
3  10.  1.0  100.
```

```
INPUTS 4
1,1  4,5  4,6  2,1
15.  60.  60.  0.
```

```
UNIT 3 TYPE 3 PUMP
PARAMETERS 4
300. 4.19  100.  0.
INPUTS 3
4,5   4,2   2,1
60.   0.0    1

UNIT 11 TYPE 11 FLOW MIXER
PARAMETERS 1
1
INPUTS 4
*T1   M1   T2  MDOT2
3,1  3,2  0,0  14,1
60.  0.0  15.  0.0

UNIT 6 TYPE 6 HEATER
PARAMETERS 5
9999999.  60.  4.19  0.  1.0
INPUTS 4
4,6  4,4  0,0  0,0
60.  0.0  1.   20.

UNIT 14 TYPE 14 LOAD
PARAMETERS 12
0.0,0.0  7.0,0.0  7.0,21.43  21.0,21.43  21.0,0.0  24.0,0.0

UNIT 4 TYPE 4 TANK
PARAMETERS 32
*NODE NR. MODE  VOL   H   PER HIN1 HO1 HIN2 HO2  CPF   RO
  3        2    0.39 1.65 -1  1.5  0.1 0.1  -1   4.19 1000
*ULOSS  COND DK TBOIL AUXMOD
 1.44   0    0  100    2
*HAUX HTST TSET TDBU TDBL QAUX
 1.4  1.4   40    0   2   16000
 0.3  0.3   40    0   2   16000
*UAFL TFL  ALPHA BETA
 0.0  20.0  0      0
INPUTS 9
*MHI MHO  MLI   MLO  TH   TL     TENV
1,2  0,0  0,0  14,1  1,1  0,0    0,0   0,0  0,0
0.0  -2   -1    0.0  15   15.0   21.0   0    0
```

DERIVATIVES 3
60. 60. 60.

UNIT 24 TYPE 24 INTEGRATOR
INPUTS 5
16,6 1,3 4,7 6,3 4,8
0.0 0.0 0.0 0.0 0.0

```
UNIT 25 TYPE 25 PRINTER
*PRINT RUNNING TOTALS OF INTEGRATION RESULTS EVERY 24 HOURS
PARAMETERS 5
24.  24.  168.  12  1
INPUTS 5
24,1   24,2   24,3  24,5  24,4
TOTSOL TOTQU  QENV  QTANK TQREQ
KJ     KJ      KJ    KJ    KJ

UNIT 26 TYPE 25 PRINTER
PARAMETERS 5
0.25  0.  168.  11  2
INPUTS 8
4,1  4,2  4,3  4,4  4,17  4,22  4,23  4,24
MI1  MO1  MI2  MO2  TAVG  T1     T2    T3

END
```

Deck 2:

```
ASSIGN \TRNSYS14\MIKE\EX2B2S.LST    6
ASSIGN \TRNSYS14\MIKE\EX2B2S.PLT   11
ASSIGN \TRNSYS14\MIKE\EX2B2S.OUT   12
ASSIGN \TRNSYS14\WEATHER\WINTER.DAT 10

* * * * * * * * * * * * * * * * * * * * * * * * * * * * * * * * * * *
*
*   2 STORAGE TANK SYSTEM (COLLECTOR T. AND AUXILIARY T.)
*  SOLAR RADIATION AND AMBIENT TEMPERATURE OF THE
*  SECOND WEEK IN JANUARY 1994 IN BOULDER (COLORADO)
*
* * * * * * * * * * * * * * * * * * * * * * * * * * * * * * * * * * *

SIMULATION 0. 168. 0.25
WIDTH 72

UNIT 9 TYPE 9 CARD READER
PARAMETERS 11
2  6  1.0   -5 41.868 0.0   6 0.555556 -17.7773  10  -1
```

```
UNIT 16 TYPE 16 SOLAR RADIATION PROCESSOR
PARAMETERS 9
3 1 1 8 40. 4871. 0. 2  1
INPUTS 6
9,5  9,19  9,20  0,0  0,0  0,0
0.0  0.0   0.0   0.7   40.  0.0

UNIT 1 TYPE 1 COLLECTOR
PARAMETERS 14
1 1 6.5 4.19 1 50 0.7 15 0.0 -1 4.19 1 0.1 0.0
INPUTS 10
3,1 3,2 3,2 9,6 16,6 16,4 16,5 0,0 16,9 16,10
60. 0.0 0.0 1.1 0.0  0.0  0.0  0.7 0.0  40.0

UNIT 2 TYPE 2 PUMP CONTROLLER
PARAMETERS 4
3  10.  1.0  100.
INPUTS 4
1,1  4,5  4,6  2,1
15.  60.  60.  0.

UNIT 3 TYPE 3 PUMP
PARAMETERS 4
300. 4.19  100.  0.
INPUTS 3
4,5   4,2   2,1
60.   0.0   0.0

UNIT 6 TYPE 6 HEATER
PARAMETERS 5
9999999.  60.  4.19  0.  1.0
INPUTS 4
5,6  5,4  0,0  0,0
60.  0.0  1.   20.

UNIT 14 TYPE 14 LOAD
PARAMETERS 12
0.0,0.0  7.0,0.0  7.0,21.43  21.0,21.43  21.0,0.0  24.0,0.0

UNIT 4 TYPE 4 COLL.TANK
```

```
PARAMETERS 32
1 2 0.39 1.65 -1 1 1 1 1 4.19  1000 1.44 0 0 100 2
1 1 40 0 2 16000
1 1 40 0 2 16000
0.0  20.0 0 0
INPUTS 9
* MHI  MHO  MLI  MLO   TH   TL   TENV
  1,2  0,0 14,1  14,1  1,1  0,0   0,0   0,0  0,0
  0.0  -2   0.0   0.0  15.0 15.0  21.0   0    0
DERIVATIVES 1
60.
```

```
UNIT 5 TYPE 4 AUX.TANK
PARAMETERS 32
1 2 0.39 1.65 -1 1 1 1 1 4.19  1000 1.44 0 0 100 2
1 1 40 0 2 16000
1 1 40 0 2 16000
0.0  20.0 0 0
INPUTS 9
* MHI  MHO  MLI  MLO   TH   TL   TENV
 14,1  0,0  0,0  14,1  4,5  0,0   0,0   0,0  0,0
  -2   -1    -1   0.0  60.0  -1   21.0   0    0
DERIVATIVES 1
60.

UNIT 24 TYPE 24 INTEGRATOR
INPUTS 7
16,6  1,3  4,7  5,7  6,3  4,8  5,8
0.0   0.0  0.0  0.0  0.0  0.0  0.0

UNIT 25 TYPE 25 PRINTER
*PRINT RUNNING TOTALS OF INTEGRATION RESULTS EVERY 24 HOURS
PARAMETERS 5
24.  24.  168.  12  1
INPUTS 8
24,1   24,2  4,1   4,3   4,9    24,3  24,5  24,4
TOTSOL TOTQU TANKN TANKT DELTAU QENV  QTANK TQREQ
KJ     KJ    C     C     KJ     KJ    KJ    KJ

UNIT 26 TYPE 25 PRINTER
PARAMETERS 5
0.25  0.  168.  11  2
INPUTS 4
4,18  5,18  4,17  5,17
DPC   DPA    TC    TA

END
```